Marvis™

Marking and Reading System

Application Note

Datalogic S.r.l.
Via S. Vitalino, 13
40012 Calderara di Reno — Italy
Tel. +39 051 3147011
Fax +39 051 3147205

Marvis™ Application Manual
Original Instructions
Ed.: 12/2018

This manual refers to Lighter™ Suite version 7.0 and later.

© 2018 Datalogic S.p.A. and/or its affiliates

◆ ALL RIGHTS RESERVED. ◆ Without limiting the rights under copyright, no part of this documentation may be reproduced, stored in or introduced into a retrieval system, or transmitted in any form or by any means, or for any purpose, without the express written permission of Datalogic S.p.A. and/or its affiliates.

Datalogic and the Datalogic logo are registered trademarks of Datalogic S.p.A. in many countries, including the U.S.A. and the E.U.

Arex™ 400, Arex™, UniQ™, Vlase™ and Lighter™ Suite are trademarks of Datalogic S.p.A.and/or its affiliates. All other trademarks and bands are property of their respective owners.

Datalogic shall not be liable for technical or editorial errors or omissions contained herein, nor for incidental or consequential damages resulting from the use of this material.

Table of Contents

CONVENTIONS VI

INTRODUCTION 1
- About This Document 2
- Restrictions 2

SUPPORTED TOPOLOGIES AND OPERATIONS 3
- Marvis™ Configuration 4
  - Vlase™ and Matrix 300N™/410N™ 4
  - Arex™ and Matrix 300N™/410N™ 5
  - UniQ™ and Matrix 300N™/410N™ 6
  - Arex™ 400 and Matrix 300N™/410N™ 7

HARDWARE INSTALLATION 9
- Mounting Instructions for Matrix 300N™ 10
  - Mechanical assembly on Arex™ laser marker 10
  - Mechanical assembly on UniQ™ laser marker 13
  - Mechanical assembly on Arex™ 400 laser marker 16
  - Fixing the Matrix 300N™ to the bracket 19
- Connecting Matrix 300N™ /410N™ 20
  - Connecting Matrix to the Ethernet 20
    - Connecting to Matrix 20
    - Connecting to Vlase™ 20
    - Connecting to Arex™ 21
    - Connecting to UniQ™ 21
    - Connecting to Arex™ 400 22
  - Connecting Matrix to power supply 23
    - Connecting to Matrix 23
    - Connecting to Vlase™, Arex™ and UniQ™ laser markers 23
    - Connecting to Arex™ 400 laser marker 23
  - Connecting LED Ring Light ID (optional) 24
    - Vlase™, Arex™ and UniQ™ laser markers 24
    - Arex™ 400 laser marker 25

SOFTWARE CONFIGURATION 27
- How To Configure Your Marvis™ System 28
- How To Test, Mark and Validate Your Document 34
- Marking and Validation Statistics 36
- Troubleshooting 38

HELP 41
- Photometric Adjustment 42
  - Setting 42
  - Results 43
- Quality Grade Training 45
  - Industrial traceability 45
  - The Code Grading process 45
  - Quality parameters of metrics 46
    - CC - Cell Contrast 46
    - CM - Cell Modulation 46
    - FPD - Fixed Pattern Damage 46
    - UEC - Unused Error Correction 46
    - PG - Print Growth 46

ANU - Axial Non-Uniformity 46
MR - Minimum Reflectance 46
GNU - Grid Non-Uniformity (GNU) 47
Verification process 47
Verification in production environments 47
In-line validation: a real example 48
MARVIS™ advantages: training on real sample 49
MARVIS™ advantages: single metric quality grade analysis 49
MARVIS™ advantages: statistic threshold 50
ABOUT LED RING LIGHT ID 51
General Specification 52
IEC62471-1 Compliance 52

Conventions

Warnings

This symbol identifies a hazard or procedure that, if incorrectly performed, could cause personal injury or result in equipment damage. It is also used to bring the user's attention to details that are considered IMPORTANT.

High Voltage

This symbol alerts the user they are about to perform an action involving, either a dangerous level of voltage, or to warn against an action that could result in damage to devices or electrical shock.

Laser Caution

This symbol alerts the user they are about to perform an action involving possible exposure to laser light radiation.

ESD

This symbol identifies a procedure that requires you take measures to prevent Electrostatic Discharge (ESD) e.g., use an ESD wrist strap. Circuit boards are most at risk. Please follow ESD procedures.

Notes

This symbol draws attention to details or procedures that may be useful in improving, maintaining, or enhancing the performance of the hardware or software being discussed.

Chapter 1
Introduction

About This Document starting on page 2
Restrictions starting on page 2

About This Document

This document describes the implementation of a laser marker with a reading system. The result of this system is defined as MARVIS™.

NOTE

Refer to the associated reference manuals for additional information about setup, maintenance and troubleshooting. Other related manuals are:

Vlase™ User's Manual; Arex™ User's Manual; UniQ™ User's Manual; Arex™ 400 User's Manual; Matrix 120™ User's Manual; Matrix 210N™ User's Manual; Matrix 300N™ User's Manual; Matrix 410N™ User's Manual; Lighter™ Suite software User's Manual

Restrictions

The MARVIS™ solution is available for retrofit of existing Datalogic Laser Markers and Readers as shown in the following table:

FAMILY	DESCRIPTION	MODELS	NOTES
Arex™	Arex™ XX00-1X42		2015 →
Vlase™	Vlase™ 1X09-1X42		2016 →
Arex™ 20MW	Arex™ A200-XX53		
UniQ™	UniQ™ 1150-1X40		
Arex™ 400	Arex™ XXX-XX4		
Matrix 120™	Matrix 120™ X1X-01X		YAG filter
Matrix 210N™	Matrix 210N™ 2XX-X1X		
Matrix 300N™	Matrix 300N™ 4XX-01X	472-012, 473-012, 482-012, 483-013	YAG filter
Matrix 300N™	Matrix 300N™ 4XX-01X	472-010, 472-011, 473-010, 473-011,482-010, 482-011, 483-010, 483-011	NO YAG filter
Matrix 410N™	Matrix 410N™ XXX-X1X		

WARNING

The DPM illuminator is always recommended.

WARNING

If application codes must be read which are produced by Laser Marking in real time, use Matrix models incorporating YAG Filters in order to avoid burning the CMOS sensor.

Chapter 2
Supported Topologies and Operations

MARVIS™ CONFIGURATION starting on page 4

Marvis™ Configuration

Datalogic allows the integration of its products to create a complete marking and reading verification system. To make this application possible, it is necessary to integrate a laser marker (Vlase™, Arex™, UniQ™ or Arex™ 400) with a Matrix reader (120™, 210N™, 300N™, 410N™).

Datalogic makes available MARVIS™ ADD ON kits to make the integration between laser marker and Matrix reader easier. Currently these kits are compatible with Matrix 300N™ and 410N™. For the integration of Matrix 120N™/210N™ with the laser marker, contact the technical support.

Vlase™ and Matrix 300N™/410N™

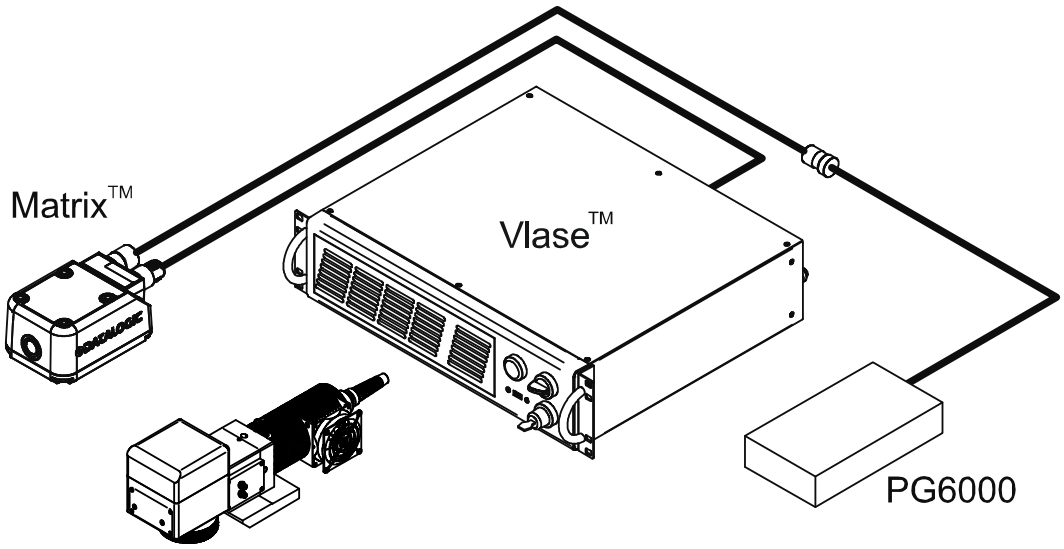

Figure 1: example of integration between the Vlase™ and the Matrix™.

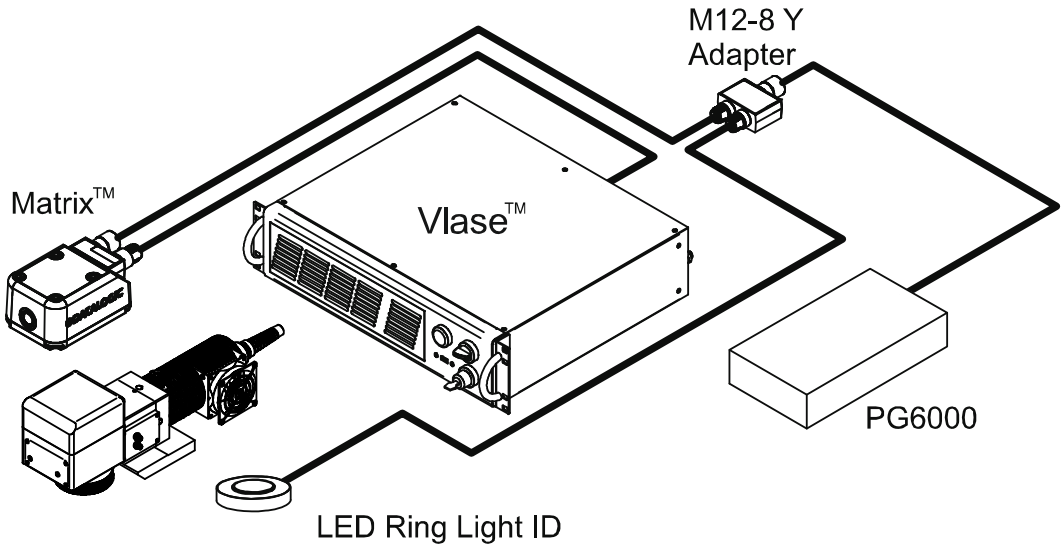

Figure 2: example of integration between the Vlase™ and the Matrix™ with LED Ring Light ID.

Arex™ and Matrix 300N™/410N™

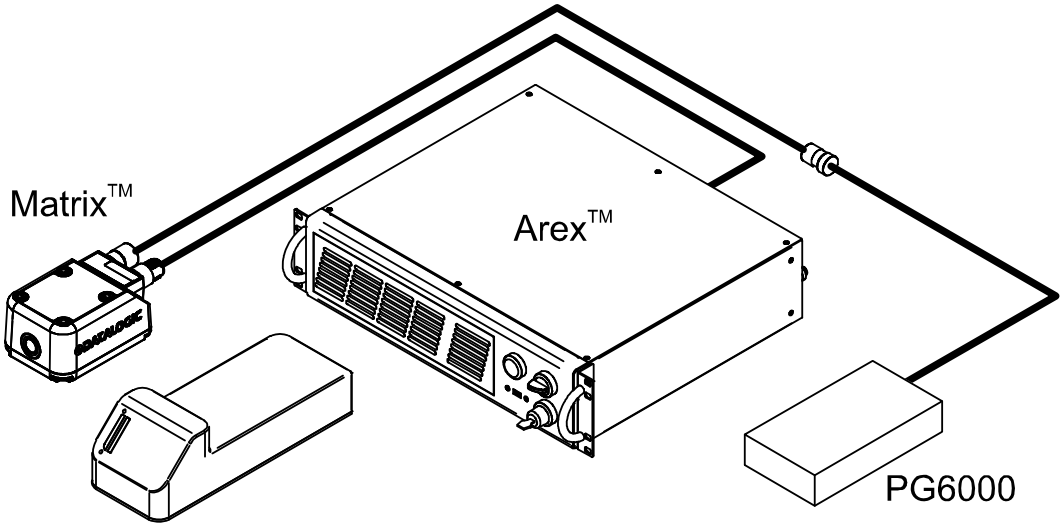

Figure 3: example of integration between the Arex™ and the Matrix™.

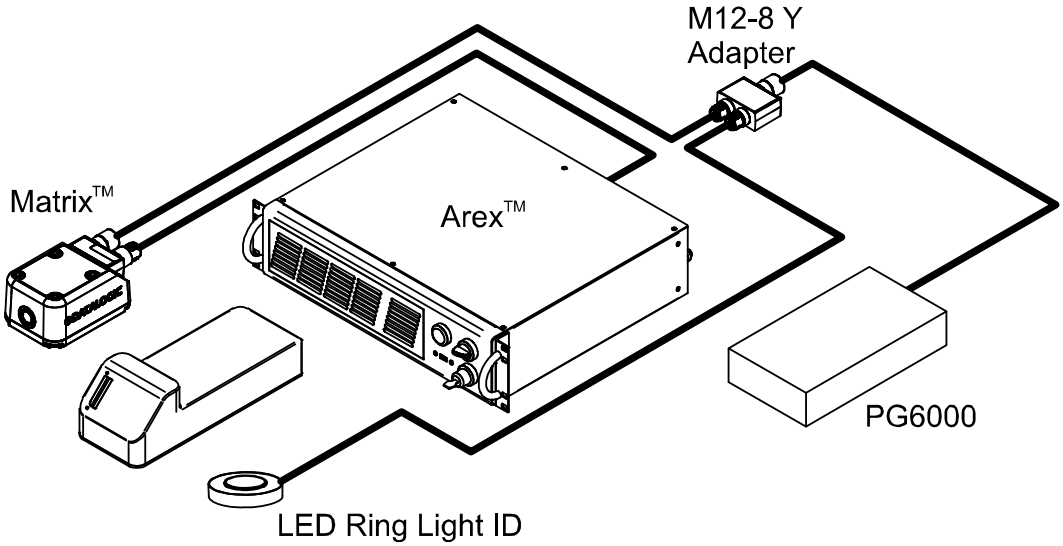

Figure 4: example of integration between the Arex™ and the Matrix™ with LED Ring Light ID.

UniQ™ and Matrix 300N™/410N™

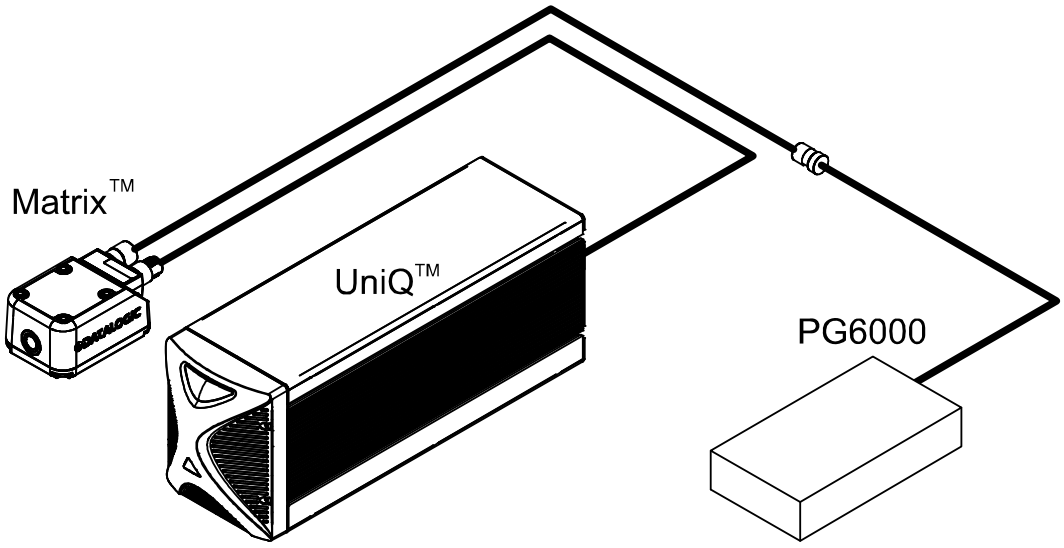

Figure 5: example of integration between the UniQ™ and the Matrix™.

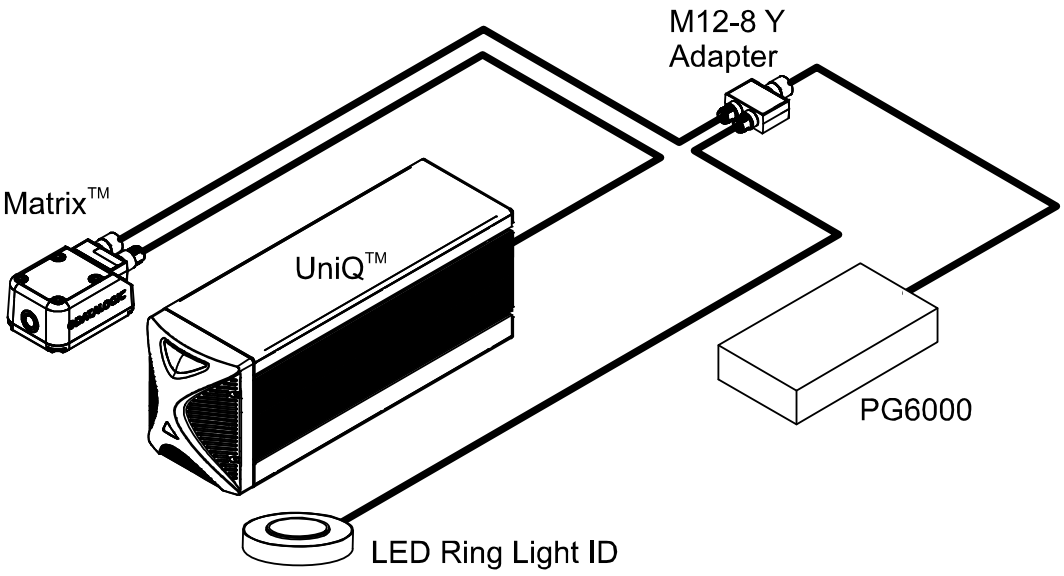

Figure 6: example of integration between the UniQ™ and the Matrix™ with LED Ring Light ID.

Arex™ 400 and Matrix 300N™/410N™

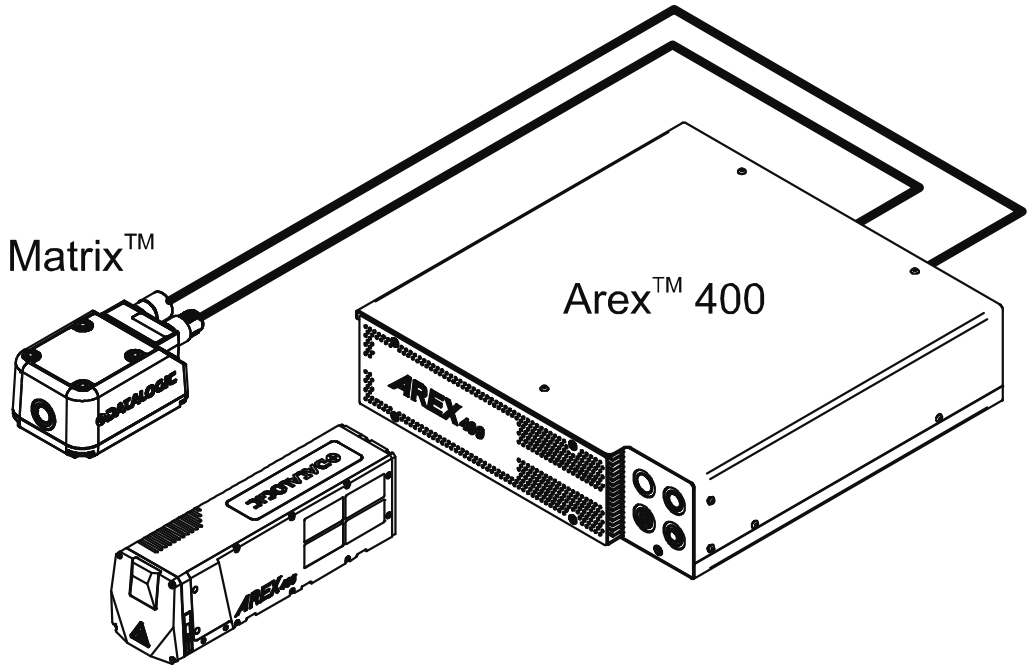

Figure 7: example of integration between the Arec™ 400 and the Matrix 300N™.

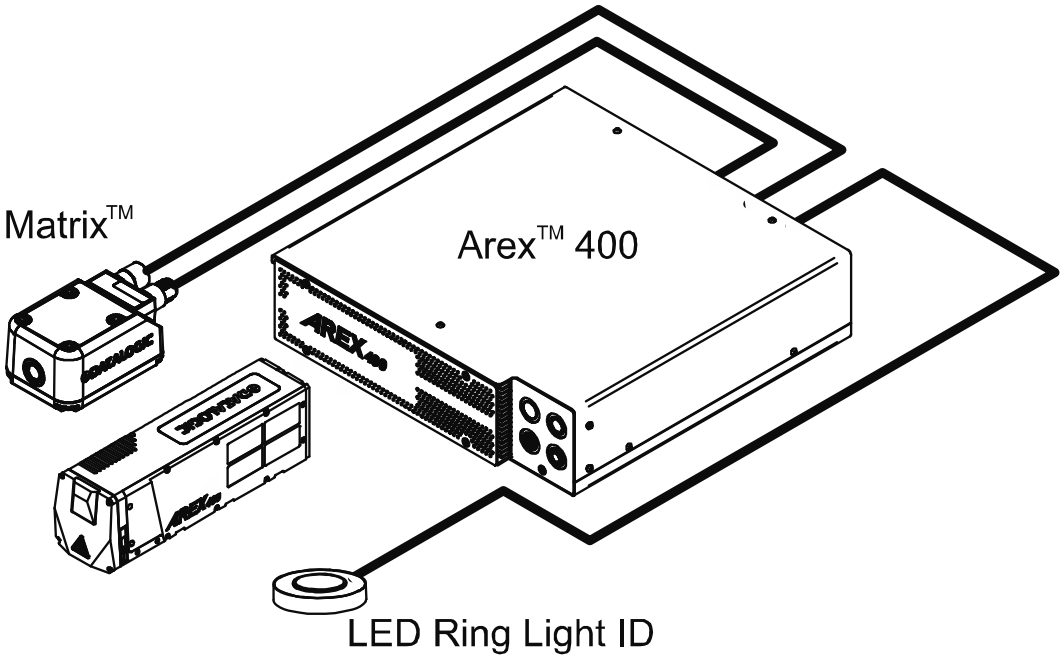

Figure 8: example of integration between the Arex™ 400 and the Matrix™ with LED Ring Light ID.

Figure 9

Chapter 3
Hardware Installation

MOUNTING INSTRUCTIONS FOR MATRIX 300N™ starting on page 10
CONNECTING MATRIX 300N™ /410N™ starting on page 20

Mounting Instructions for Matrix 300N™

Datalogic makes available MARVIS™ MOUNTING BRACKETS 300N™ to make the integration between laser marker and Matrix 300N™ reader easier.

Install the individual systems following the instructions present in the relative installation manuals. This manual explains what to do in order to obtain a mark and read application.

Mechanical assembly on Arex™ laser marker

At first, mount the LED Ring Light ID (if present) on the bracket:

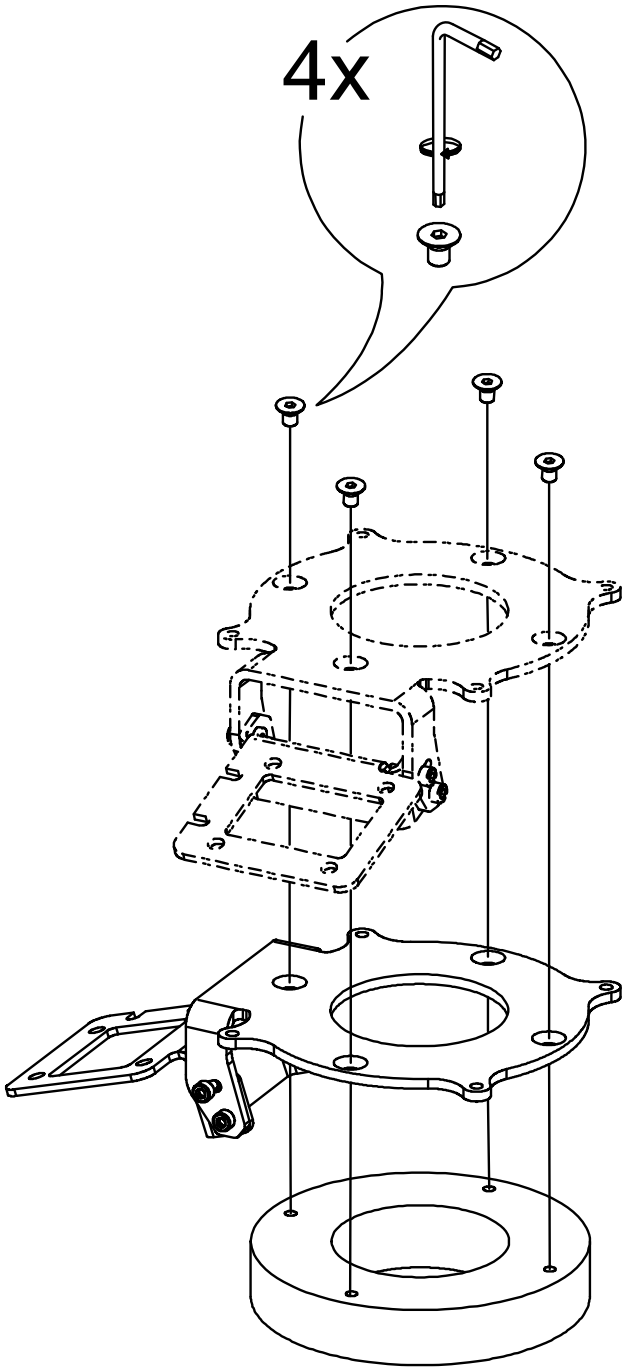

Figure 1: LED Ring Light ID mounting on Arex™.

WARNING

The assembly of the following accessory changes the fixing distance by the value of the base plate thickness.

Fix the bracket to the adjustment plate with the supplied screws.
The bracket can be installed in two different positions:

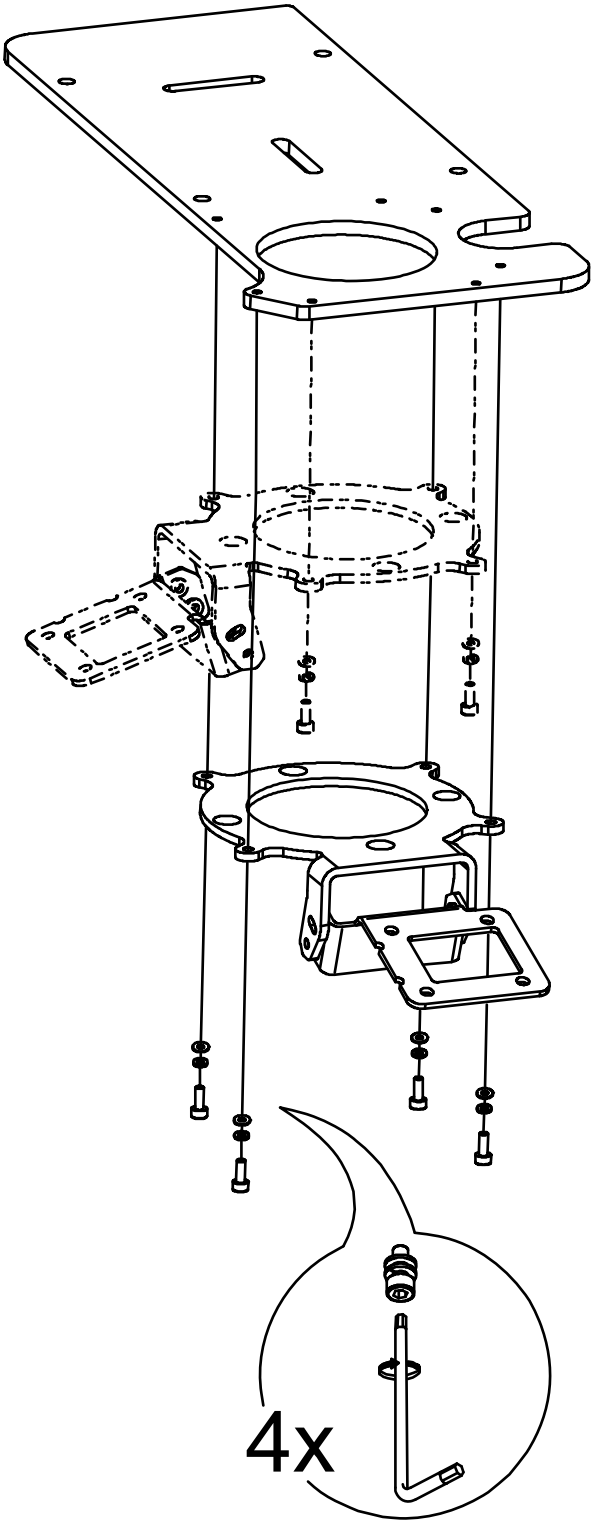

Figure 2: Bracket mounting on Arex™.

Mount the bracket between the Arex™ Scan Head and the fixing plane.

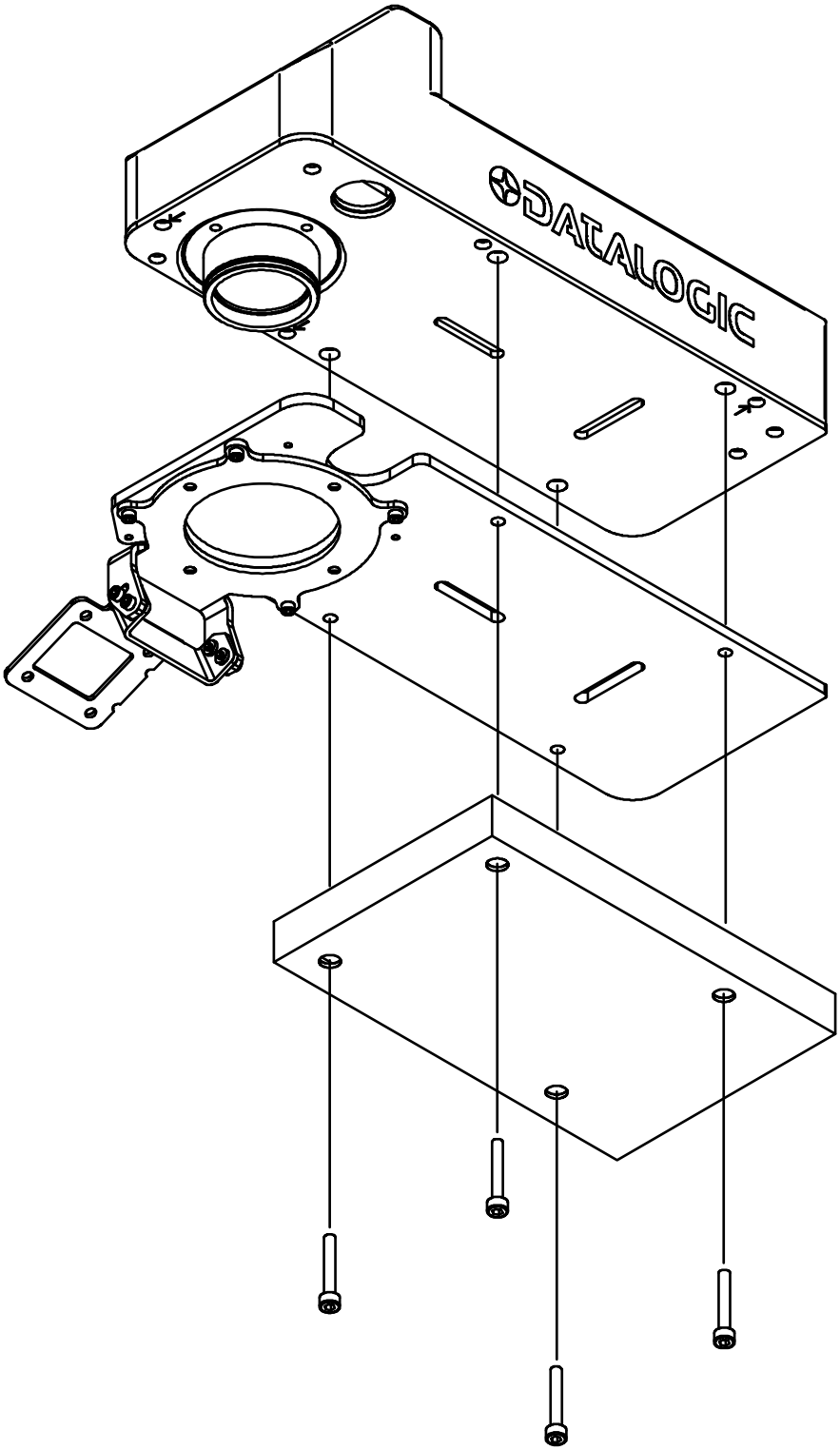

Figure 3: Fixing of Arex™ with bracket on fixing plane.

Mechanical assembly on UniQ™ laser marker

At first, mount the LED Ring Light ID (if present) on the bracket:

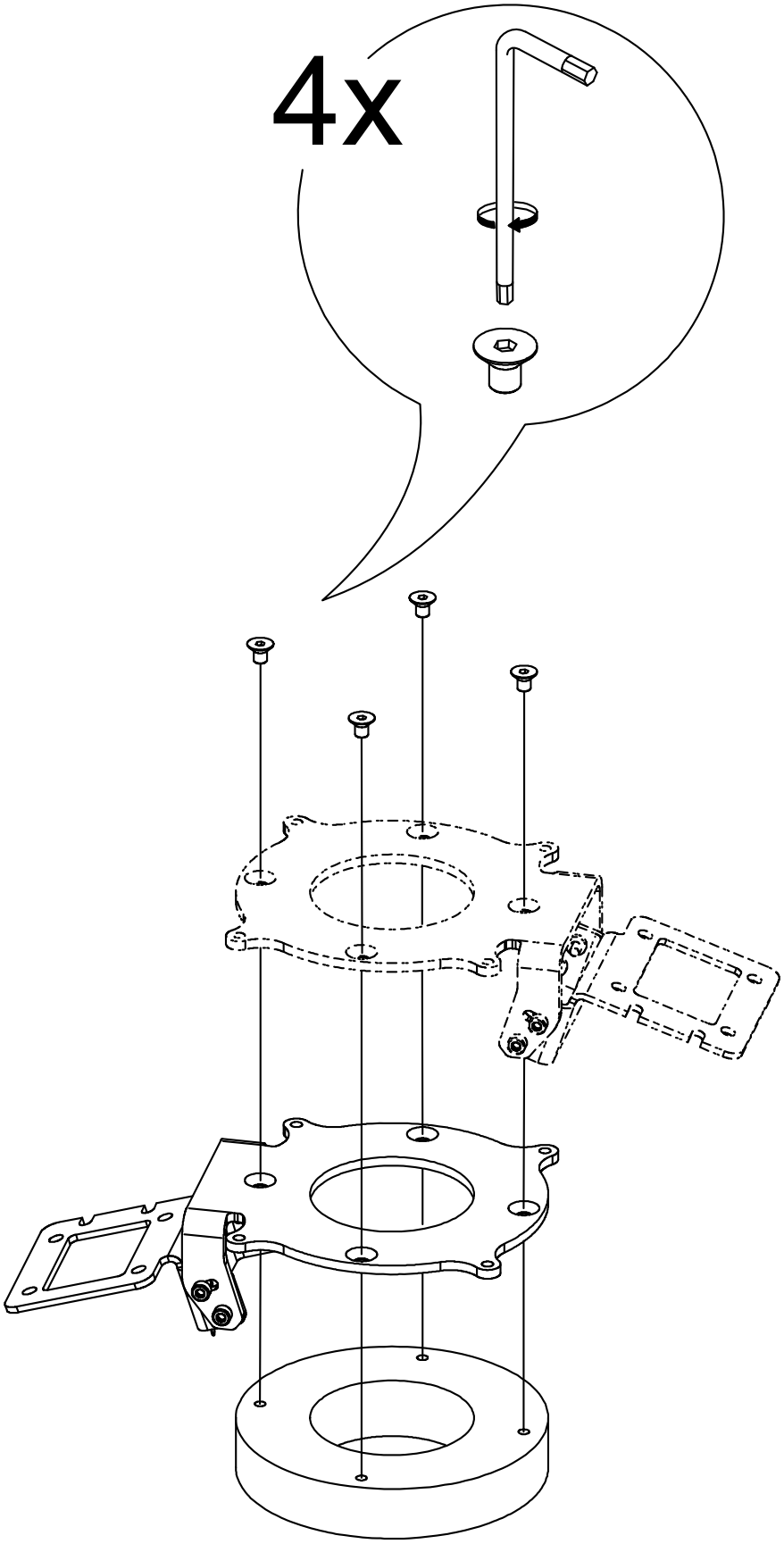

Figure 4: LED Ring Light ID mounting on UniQ™.

WARNING

The assembly of the following accessory modifies the fixing points.

Fix the adjustment plate to the Uniq ™ with the supplied screws as shown:

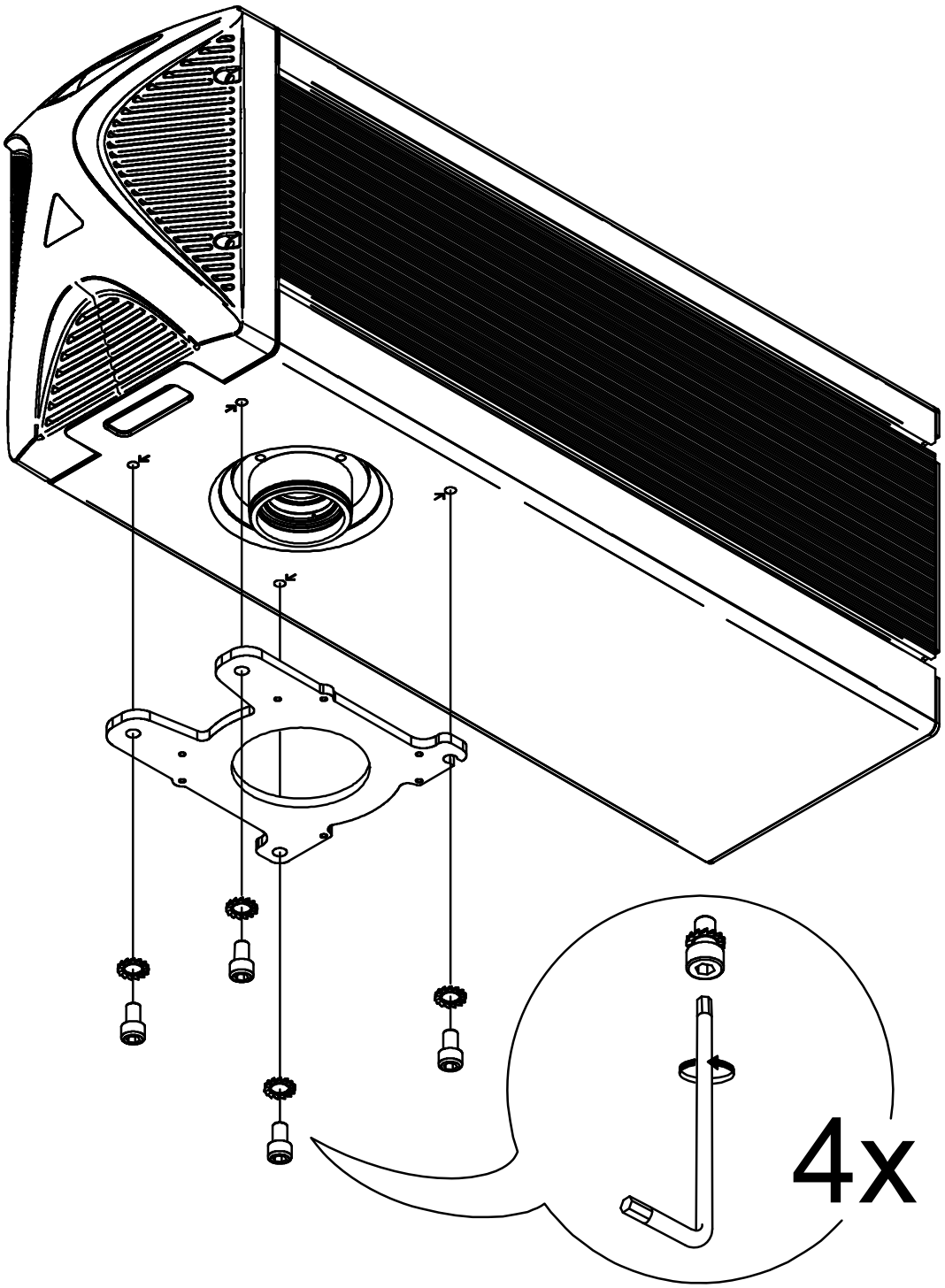

Figure 5: Fixing adjustment plate on UniQ™.

Fix the bracket to the adjustment plate with the supplied screws.
The bracket can be installed in two different positions:

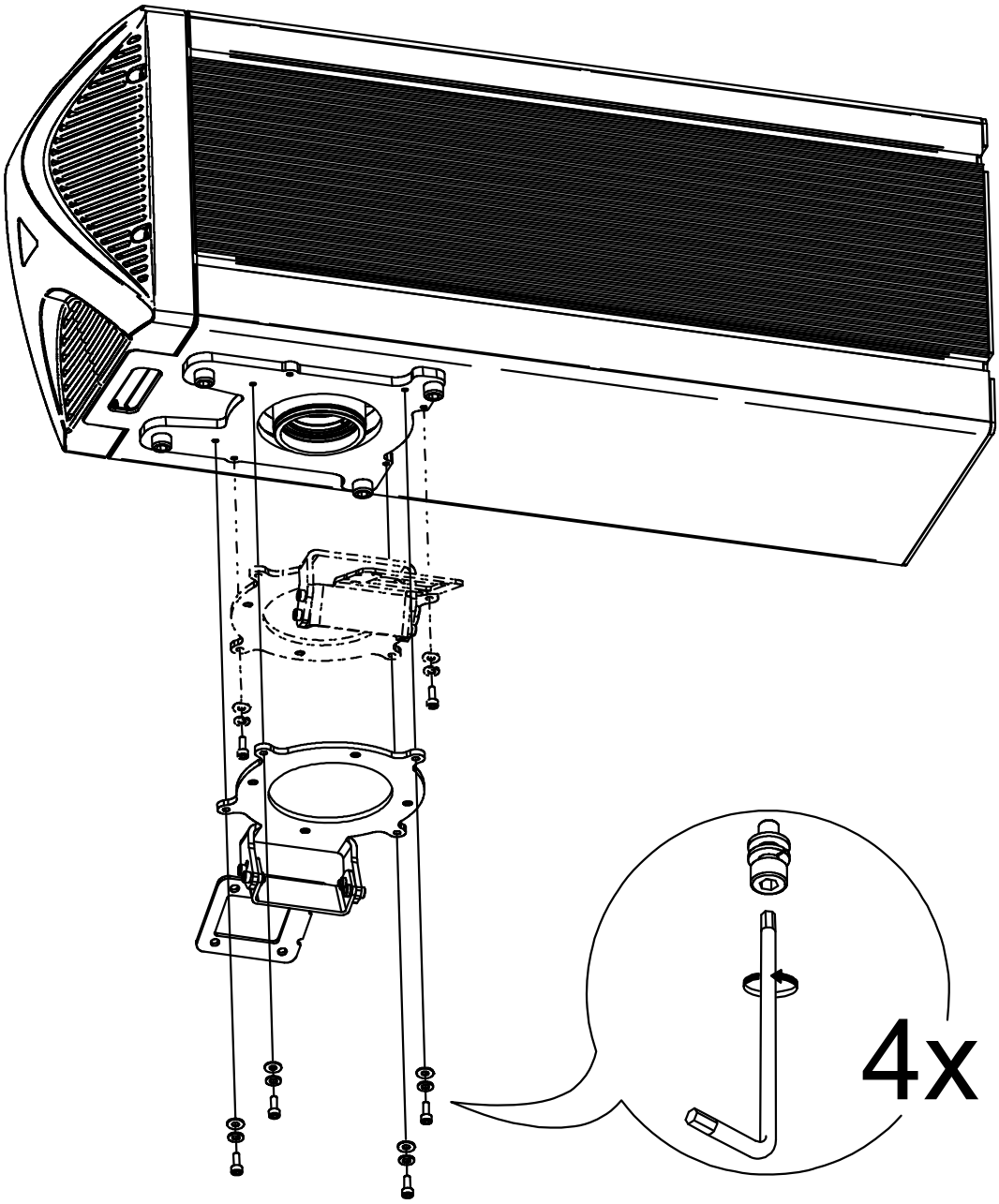

Figure 6: Bracket mounting on UniQ™.

Mechanical assembly on Arex™ 400 laser marker

At first, mount the LED Ring Light ID (if present) on the bracket:

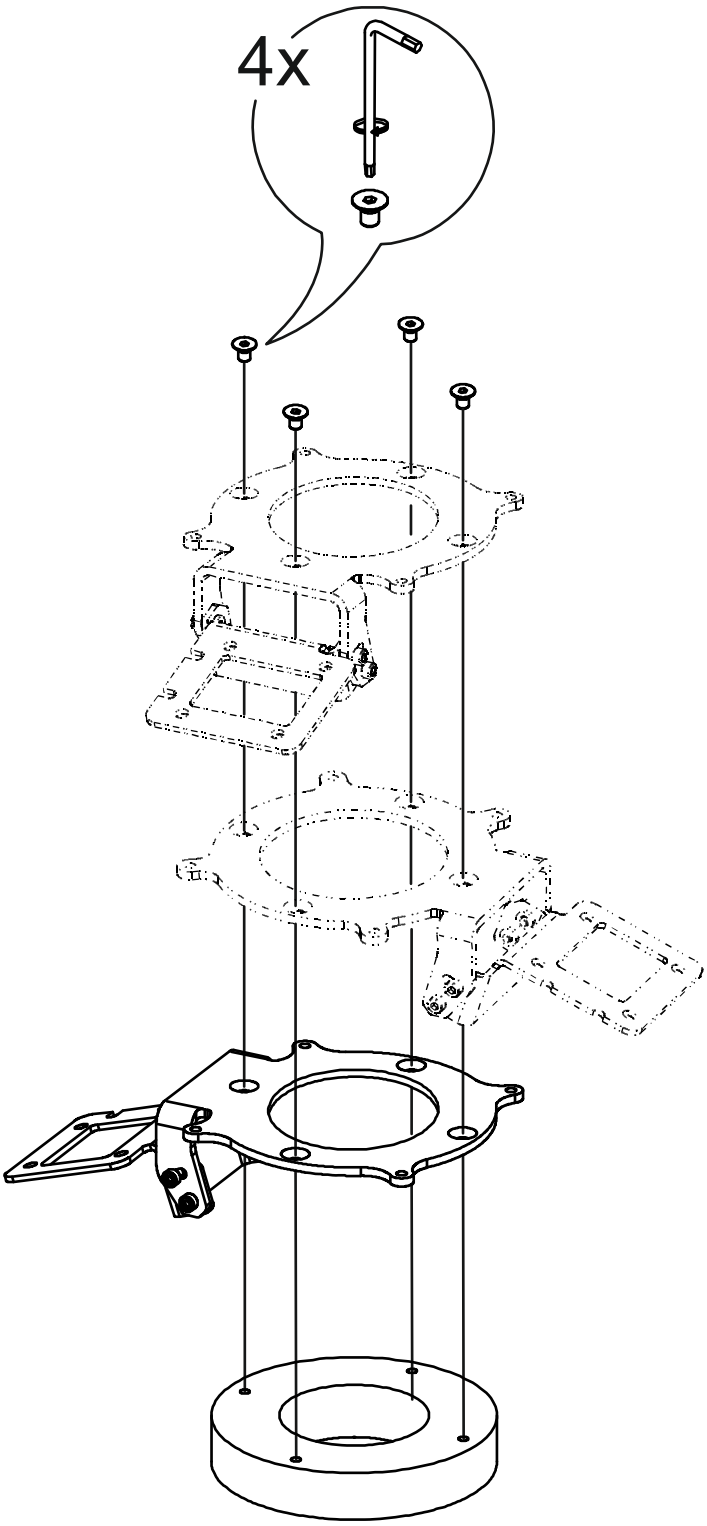

Figure 7: LED Ring Light ID mounting on Arex™.

Fix the adjustment plate to the Arex™ 400 with the supplied screws as shown:

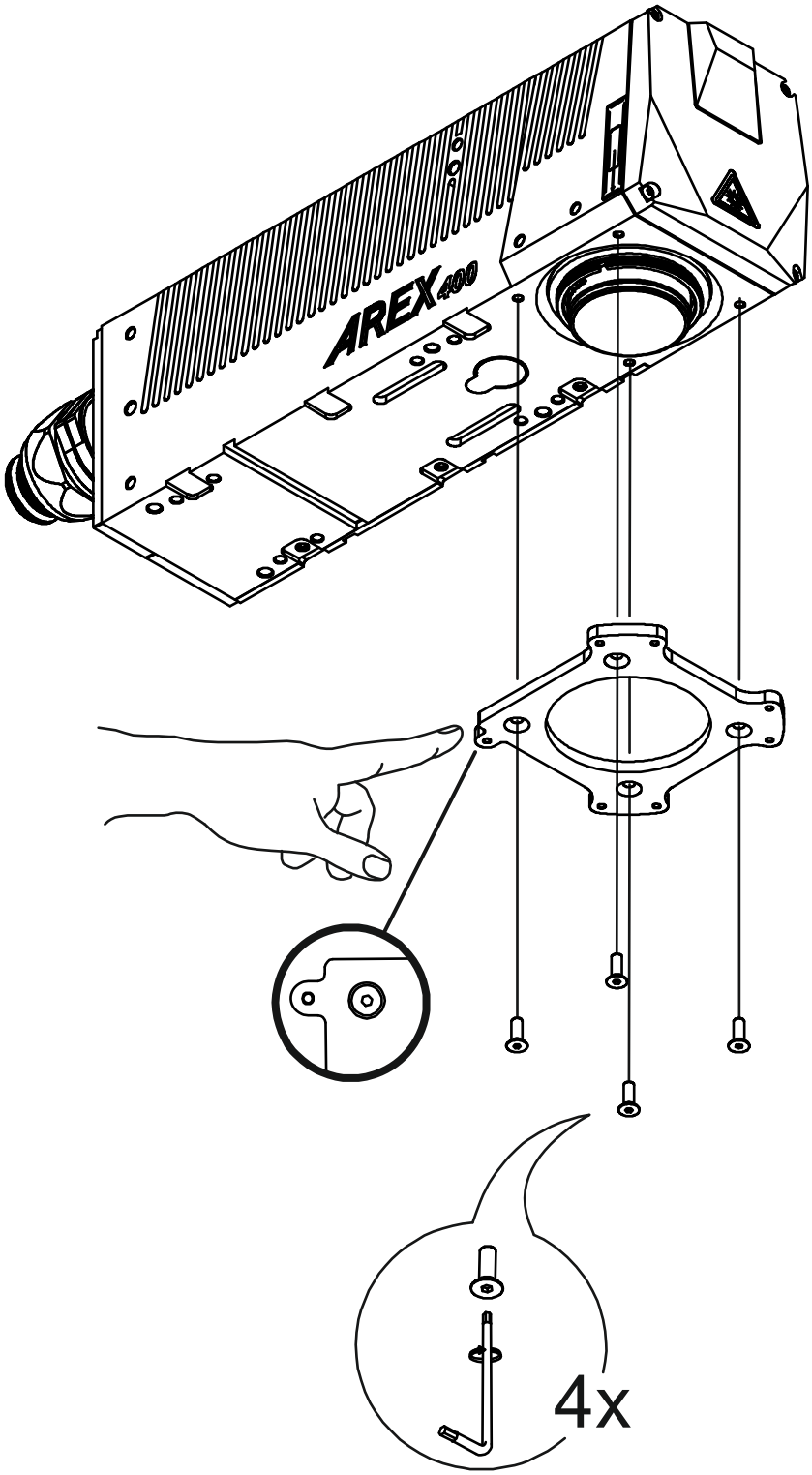

Figure 8: Fixing adjustment plate on Arex™ 400.

Fix the bracket to the adjustment plate with the supplied screws.The bracket can be installed in three different positions:

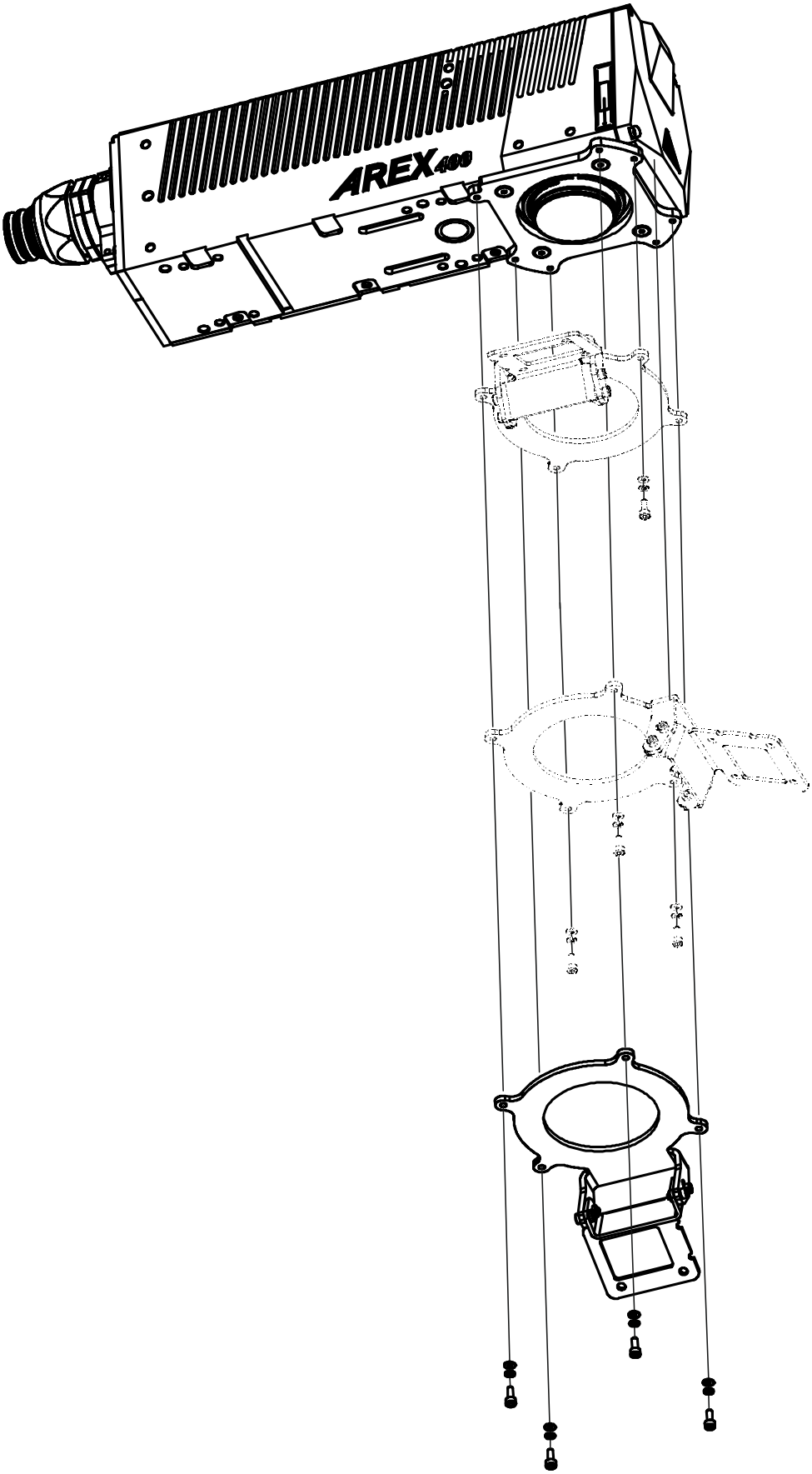

Figure 9: Bracket mounting on Arex™ 400.

Fixing the Matrix 300N™ to the bracket

Fix the Matrix 300N™ to the bracket with the supplied screws.

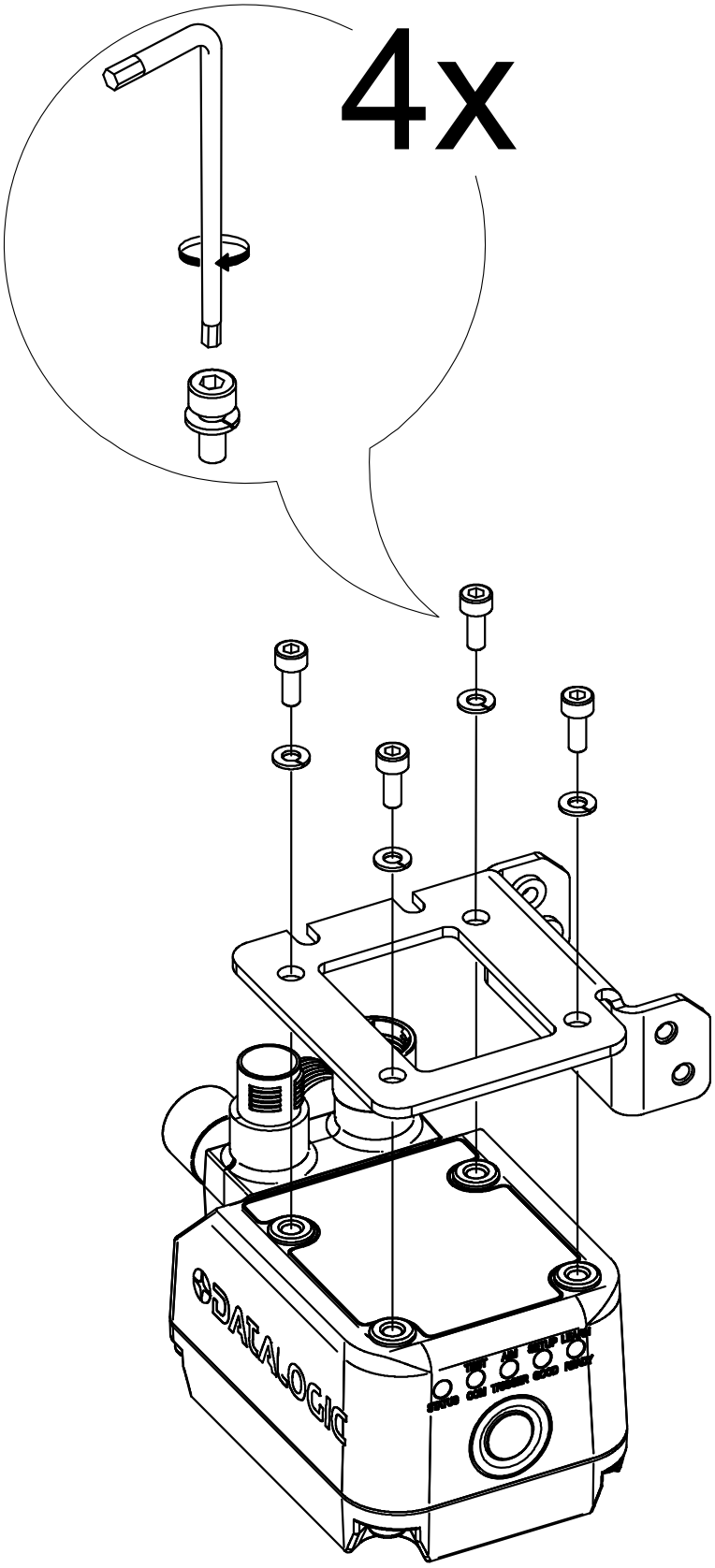

Figure 10: Matrix 300N™ mounting on bracket.

Connecting Matrix 300N™ /410N™

This section describes the Marvis™ system wiring. Carry out the connecting operations as described below.

NOTE

Refer to the corresponding user manual of the laser marker for the main connections.

WARNING

Connect the components of the Marvis™ system together WITHOUT voltage in order to avoid risks to the operator and to the laser marker.

Connecting Matrix to the Ethernet

Connecting to Matrix

Connect the M12 connector of the Ethernet cable to the M12-4F connector of the Matrix:

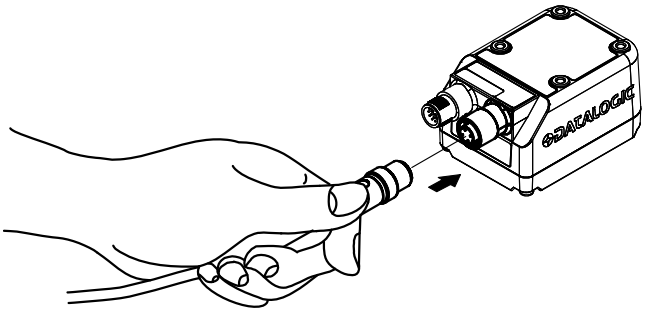

Figure 11: Wiring Ethernet cable to Matrix.

Connecting to Vlase™

Connect the RJ-45 connector of the Ethernet cable to the laser marker:

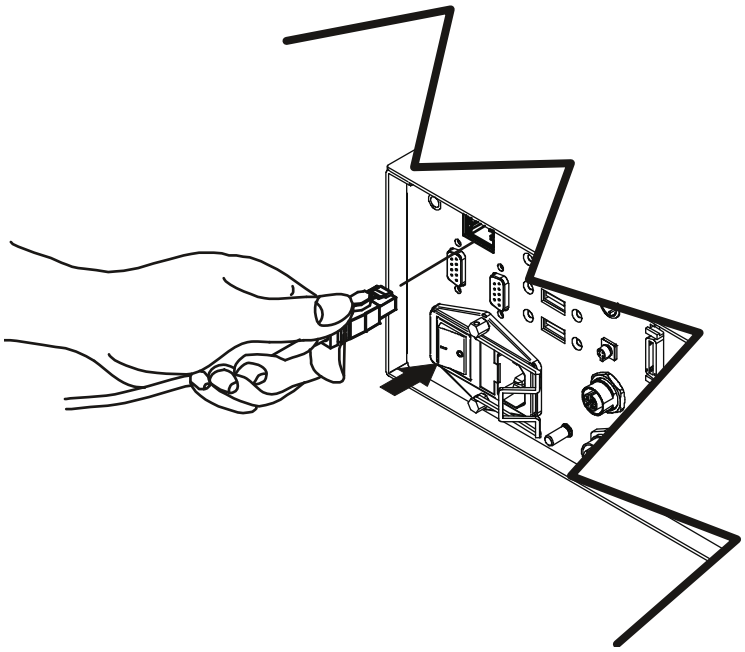

Figure 12: Wiring Ethernet cable on Vlase™.

Connecting to Arex™

Connect the RJ-45 connector of the Ethernet cable to the laser marker:

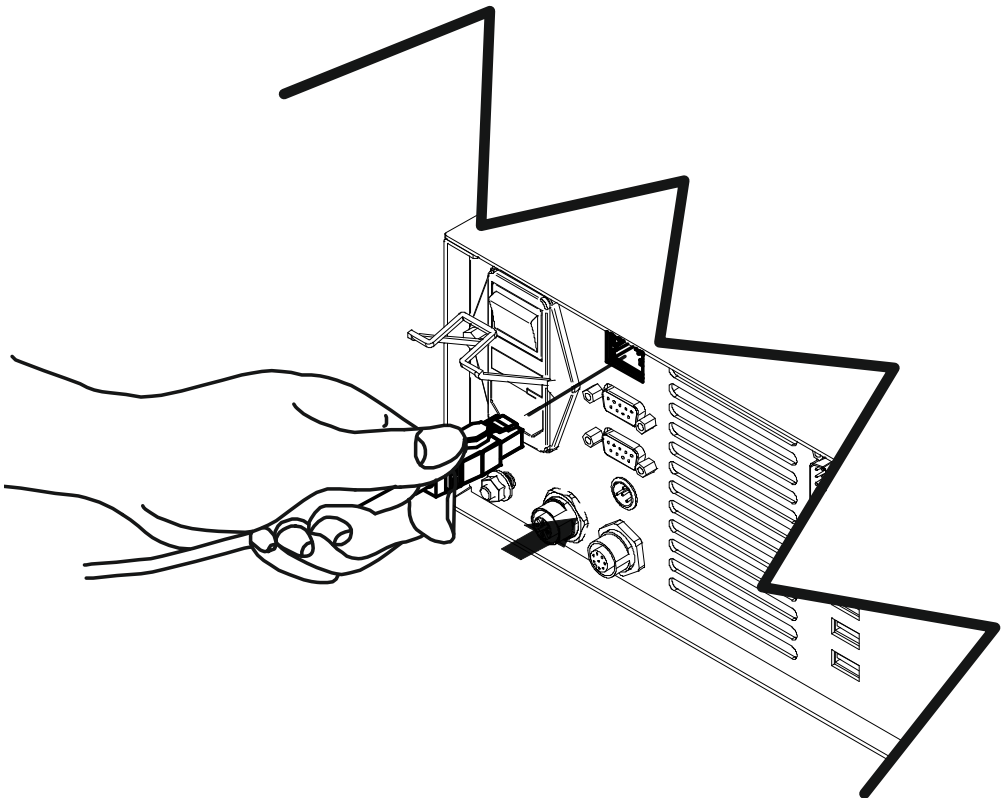

Figure 13: Wiring Ethernet cable on Arex™.

Connecting to UniQ™

Connect the RJ-45 connector of the Ethernet cable to the laser marker:

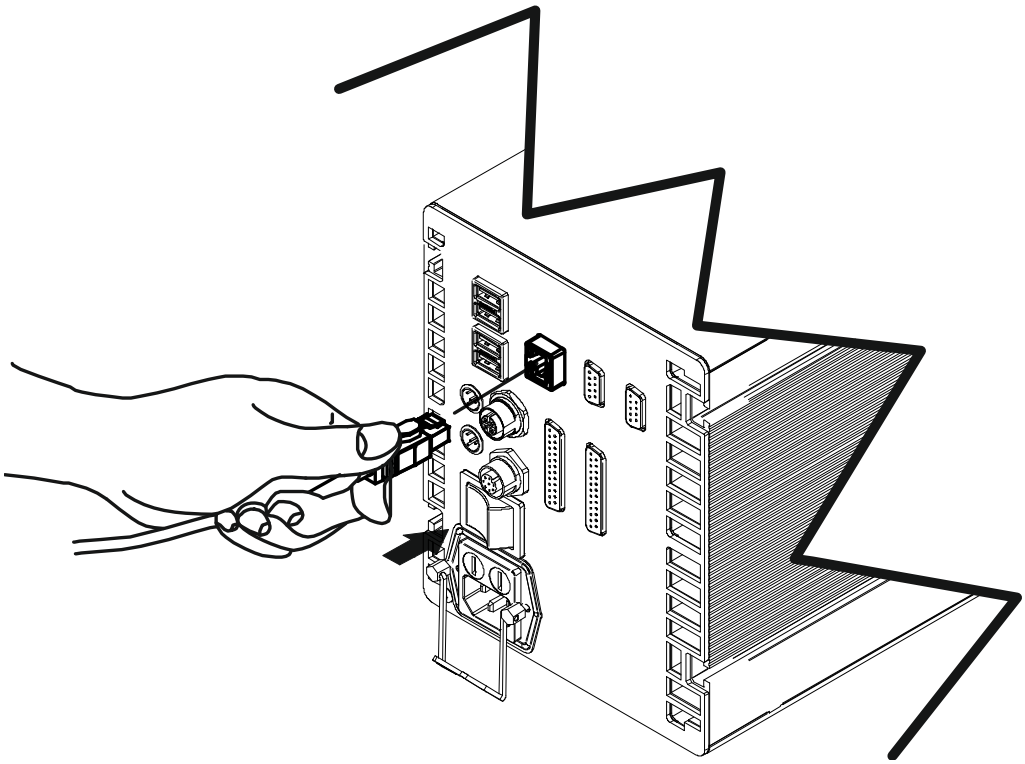

Figure 14: Wiring Ethernet cable on UniQ™.

Connecting to Arex™ 400

Connect the RJ-45 connector of the Ethernet cable to the laser marker:

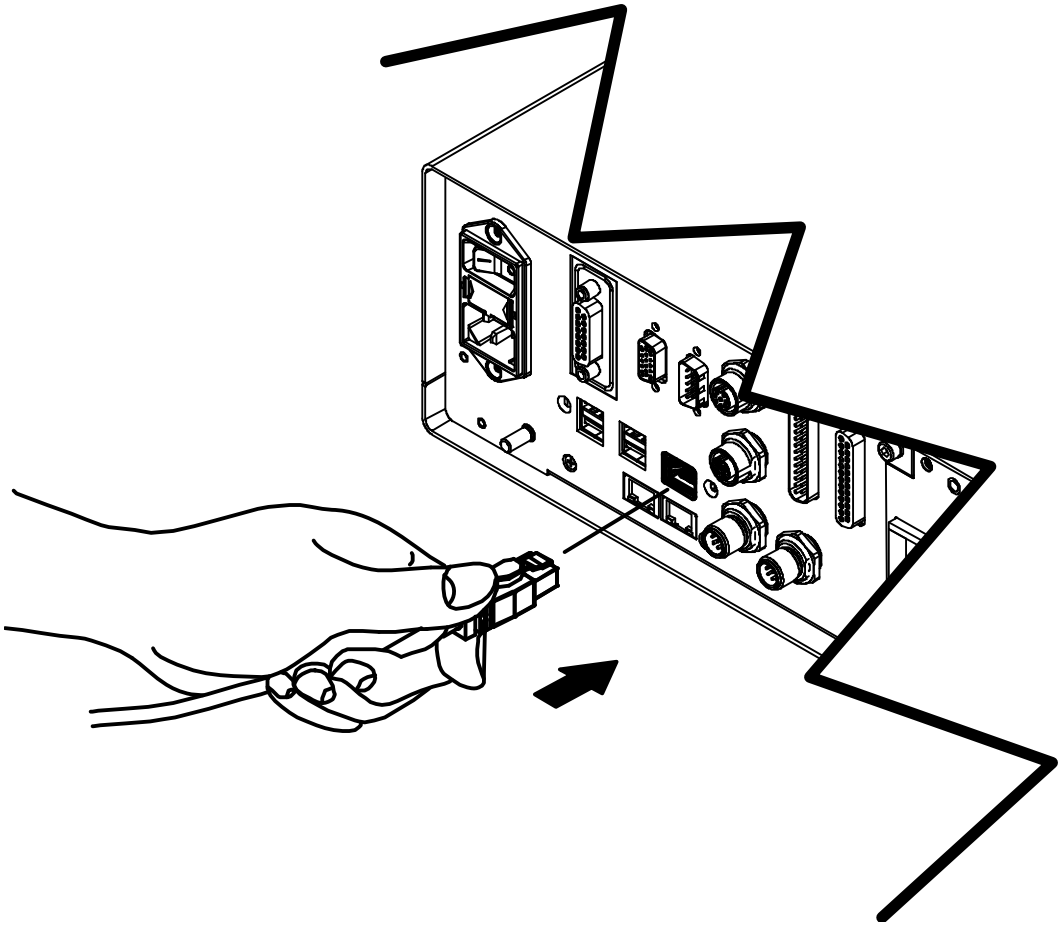

Figure 15: Wiring Ethernet cable on Arex™ 400.

NOTE

If the laser marker is to be controlled remotely, an Ethernet switch can be used for network connections.

WARNING

If the "Discovery" function does not detect any device, disconnect other devices from the LAN and try again.

Connecting Matrix to power supply

Connecting to Matrix

Connect the power supply cable to Matrix (via M12–17F).

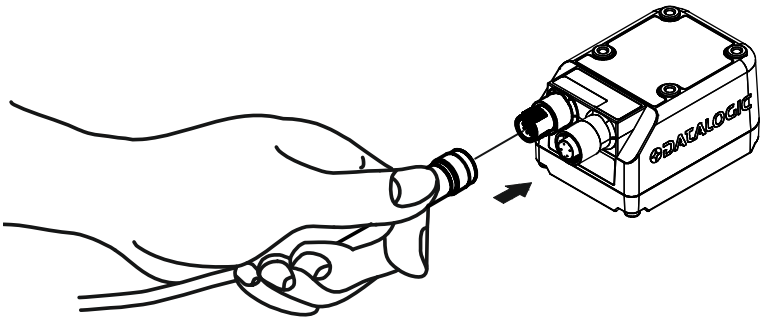

Figure 16: Wiring M12-17F connector to Matrix.

Connecting to Vlase™, Arex™ and UniQ™ laser markers

Connect the power supply cable of the Matrix to power supply PG6000 (via M12–8F).

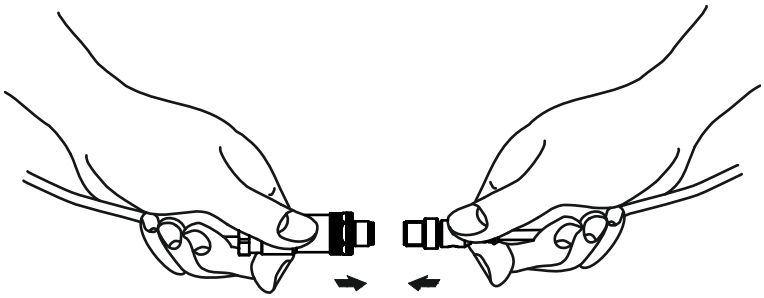

Figure 17: Wiring M12-8F connector to PG6000.

Connecting to Arex™ 400 laser marker

Connect the power supply cable of the Matrix to the Device Port 1 on the control rack back panel:

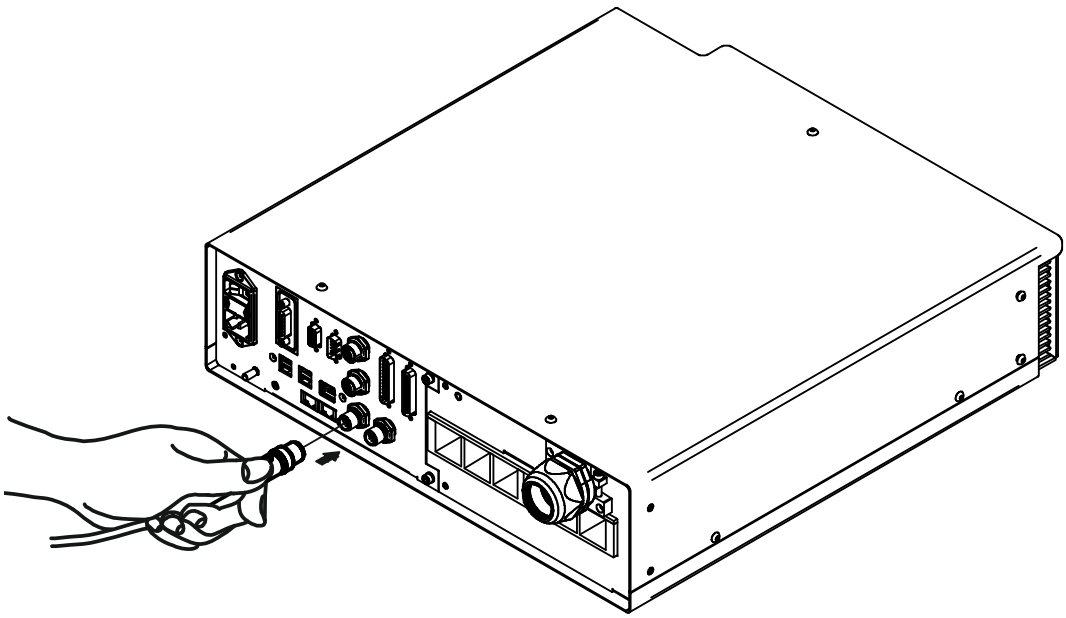

Figure 18: Wiring M12-8F connector to the Arex™ 400 Device port 1.

Connecting LED Ring Light ID (optional)

Vlase™, Arex™ and UniQ™ laser markers

Connect the M12 connector of The LED Ring Light ID to the M12-8Y adapter on one of the two M8-M connectors.

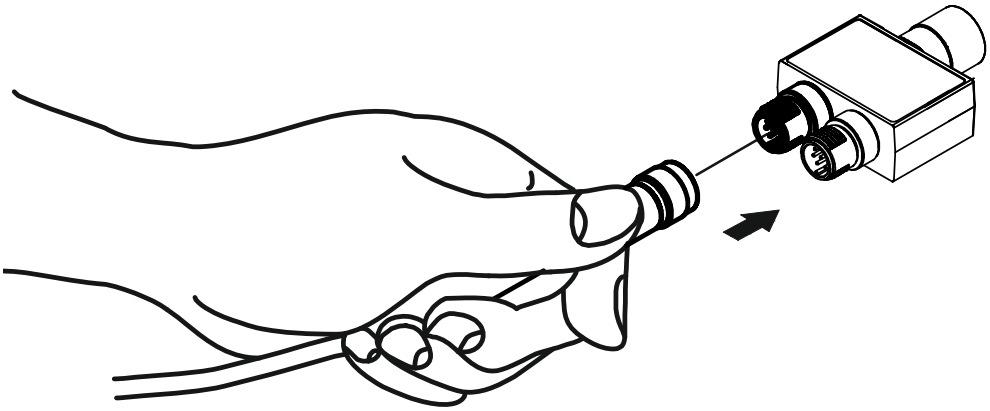

Figure 19: Wiring LED Ring Light ID to the adapter.

Connect the power supply cable of the Matrix to the other M8-M connector of the M12-8Y adapter.

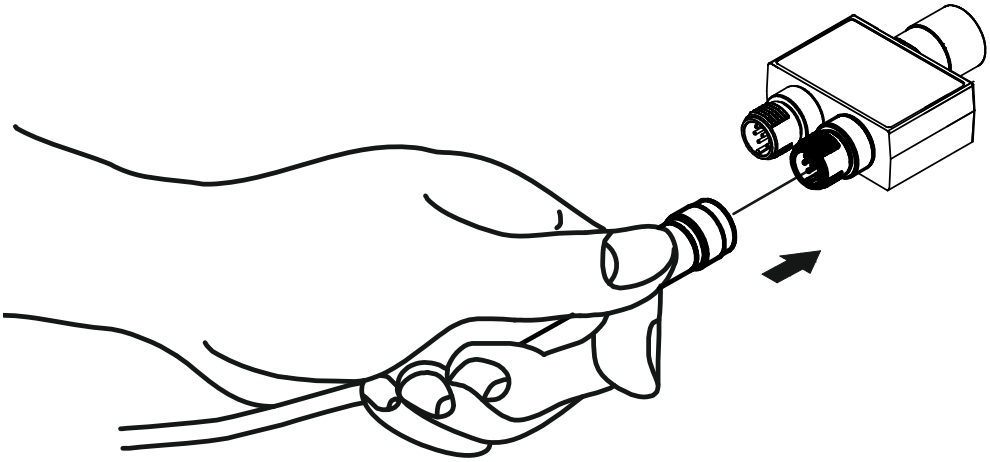

Figure 20: Wiring Matrix™ to the adapter.

Finally connect the PG6000 M8-8F connector to the M8-F connector on the adapter.

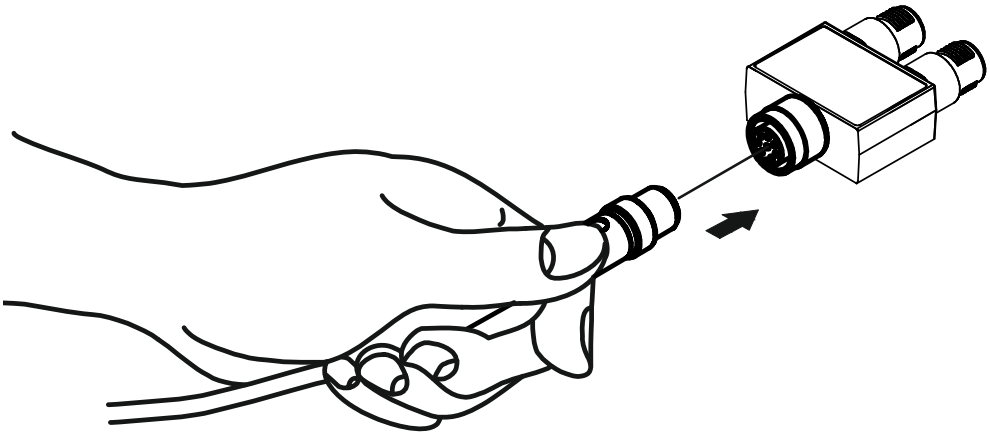

Figure 21: Wiring PG6000 to the adapter.

Arex™ 400 laser marker

Connect the M12 connector of The LED Ring Light ID to the Device Port 2 on the control rack back panel.

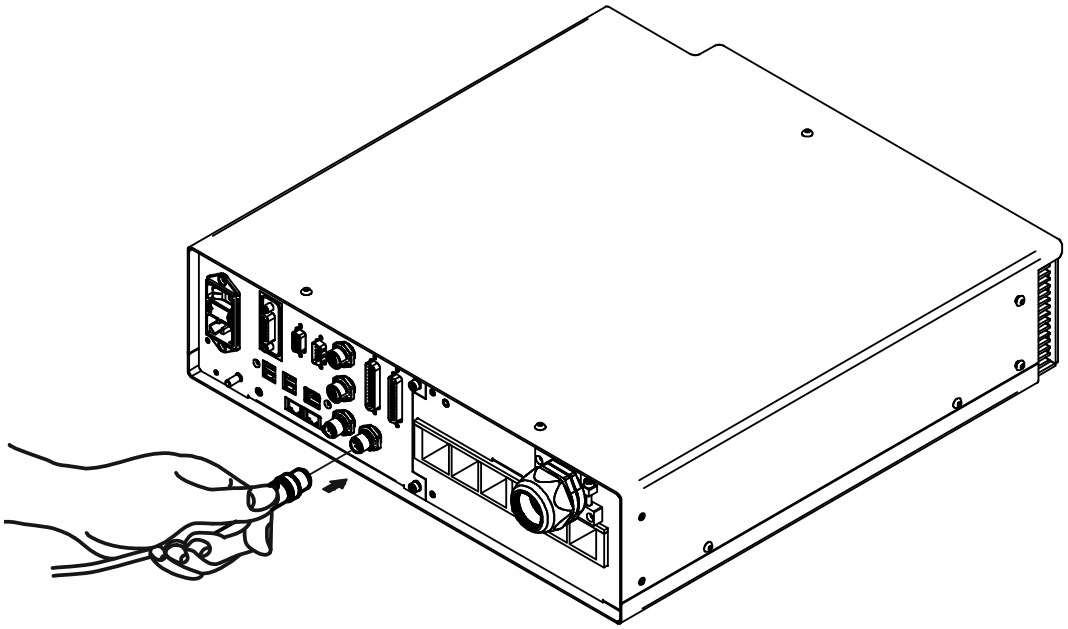

Figure 22Wiring LED Ring Light ID to the Arex™ 400 Device port 2.

Chapter 4
Software Configuration

How To Configure Your Marvis™ System starting on page 28
How To Test, Mark and Validate Your Document starting on page 34
Marking and Validation Statistics starting on page 36
Troubleshooting starting on page 38

NOTE

Refer to Lighter Suite software user manual for a proper use of the same.

How To Configure Your Marvis™ System

Right-click on the Laser Engine icon in the Icon Tray and select the **Laser configuration** item.

In the Laser Configuration window, go to the **MARVIS** section and choose **Discovery**.

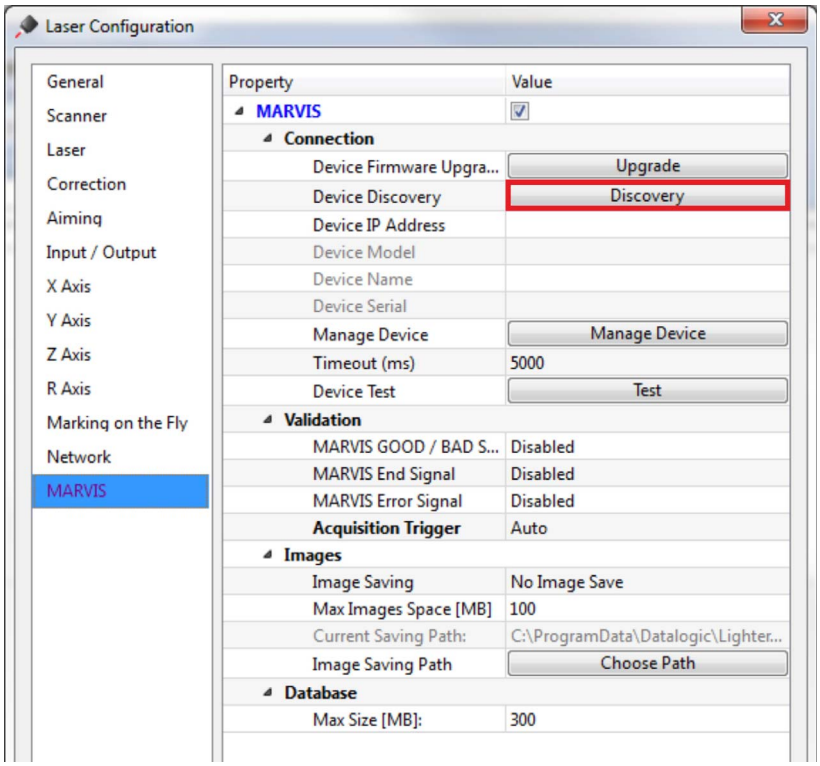

NOTE

If the laser marker is to be controlled remotely, an Ethernet switch can be used for network connections.

Select the reader to connect and press **Manage Device**.

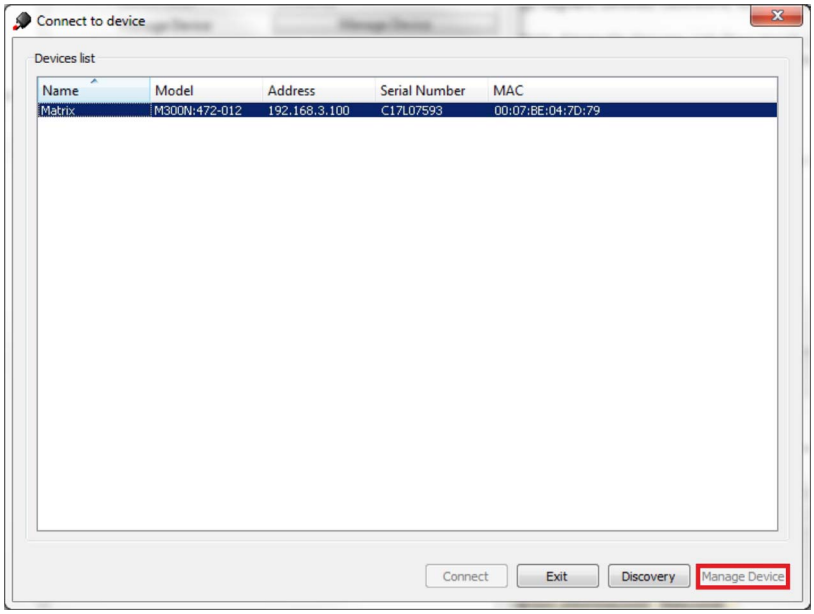

Set the IP address to assign to the reader and press **Change**.

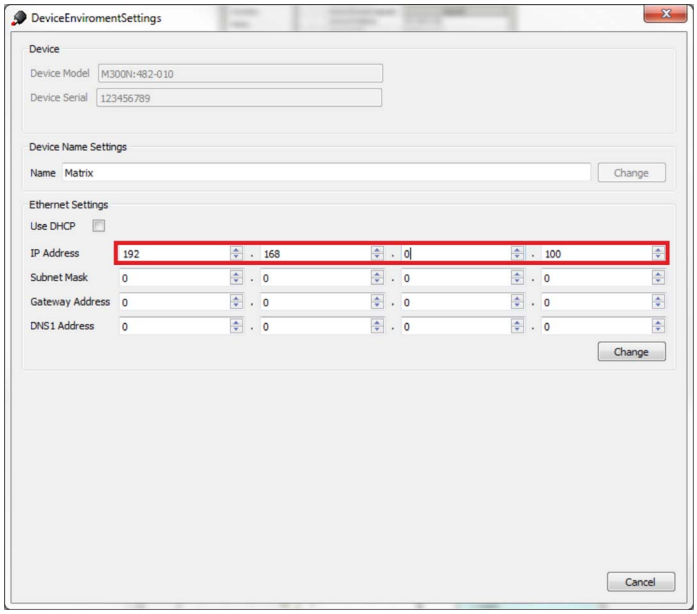

NOTE

The IP address to be assigned must belong to the same subnet as the laser marker.

WARNING

If the "Discovery" function does not detect any device, disconnect other devices from the LAN and try again.

WARNING

The DHCP option is to be used only for advanced users.

Press **Test** to verify the correct connection of the laser marker to the reader.

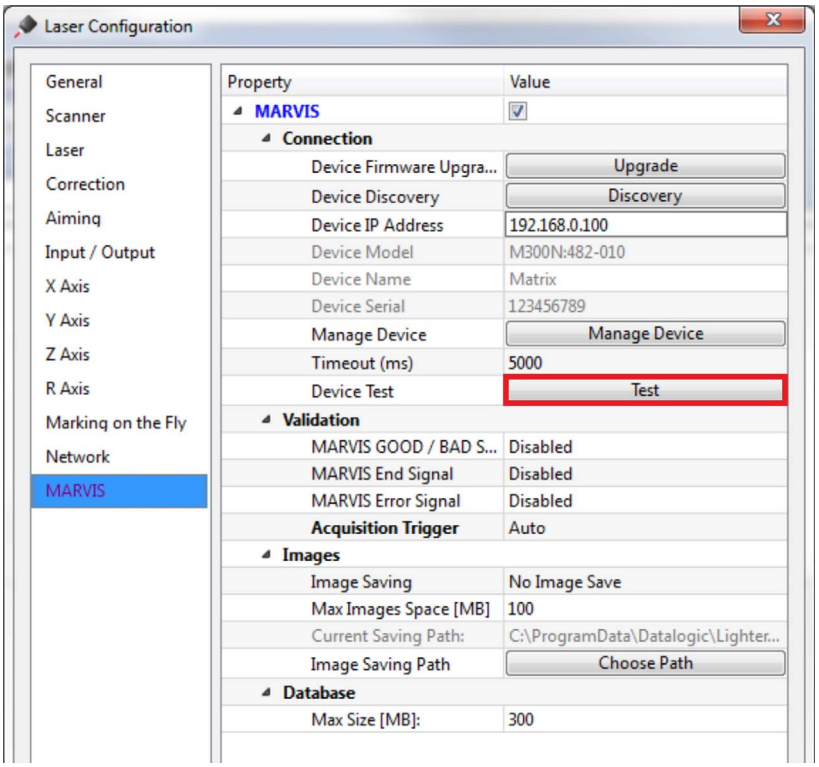

When the test is complete, press **Apply** and then **OK** to proceed with the configuration.

Start Lighter Suite, create a layer, add a code (for example a Datamatrix) and press **Photometric Adjustment**.

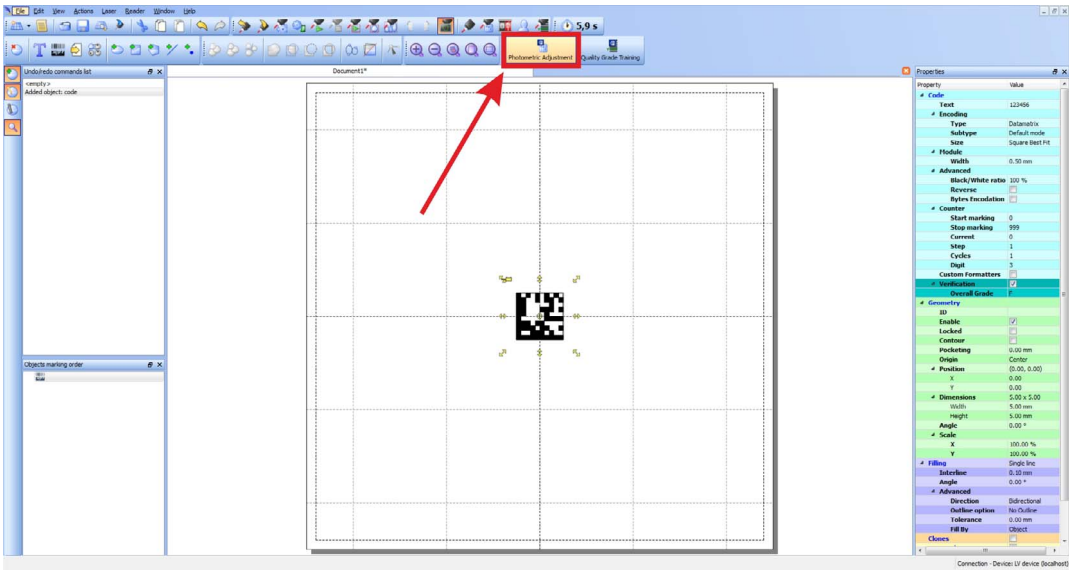

In the new window, press **Auto Setup** to automatically configure the photometric parameters of the reader.

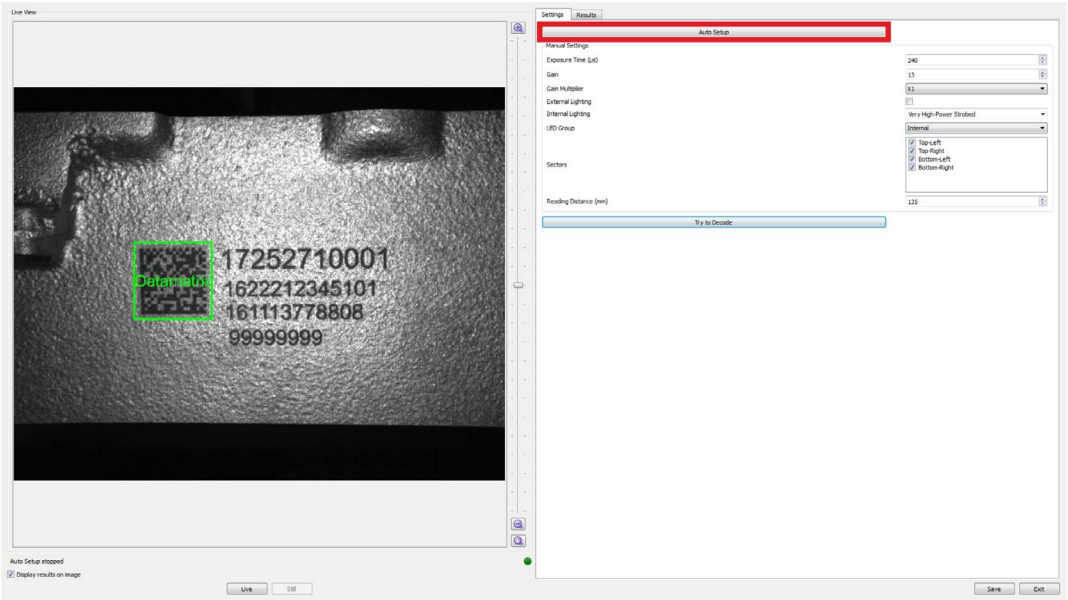

If the Auto setup is completed correctly the decoding is successful:

NOTE

Auto Setup estimates the exposure time and gain parameters based on the luminosity and contrast observed in the captured image but it doesn't always correspond to the optimum results for Quality Grading. We recommend therefore to consider the Auto Setup results as a starting point to obtain the optimum working conditions. If you don't obtain the expected grading results from your reference samples, you should adjust the photometry parameters manually and observe the statistical behavior of the grading until the desired results are obtained. Refer to "Help" on page 41 for more information.

In Results tabs copy (CTRL+C) the text of the decoding result and press **Save** to save the parameters and continue.

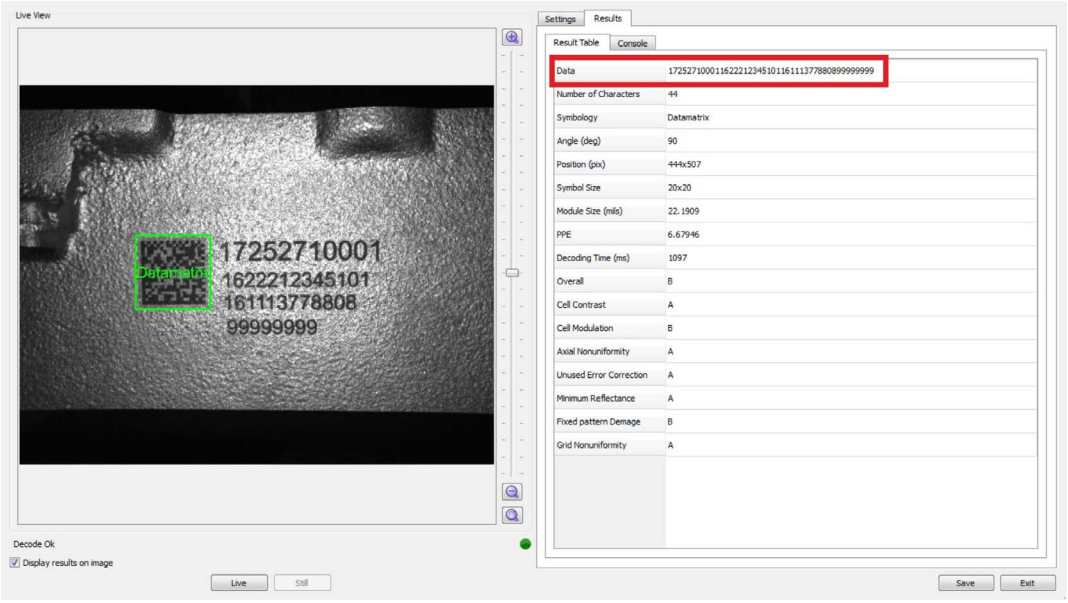

Now paste (CTRL+V) the text of the decoding result in the property of the symbol and proceed with the learning of the quality grade by selecting the **Quality Grade Training** button.

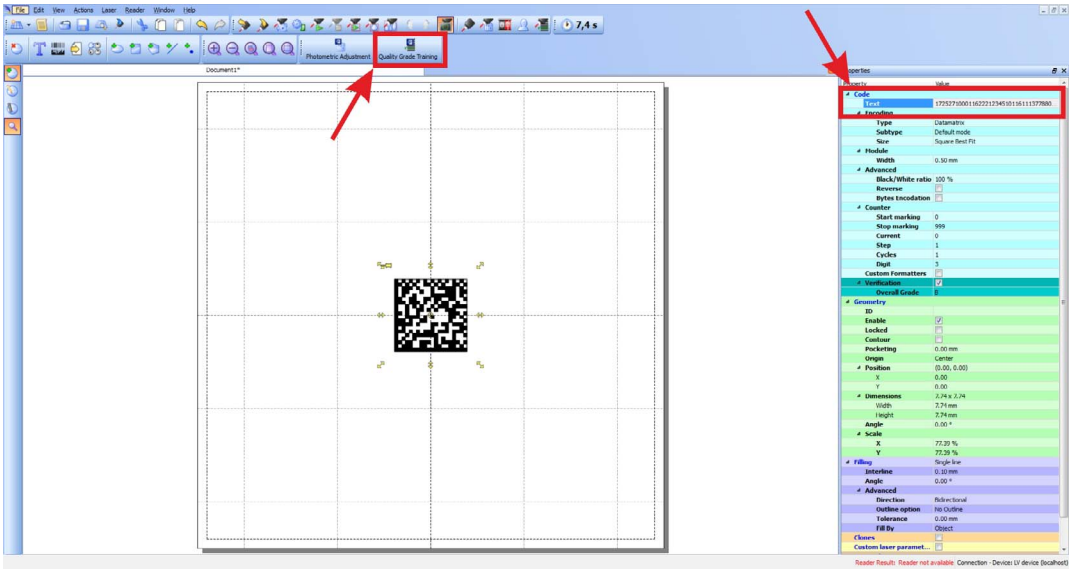

Type the acquisition number to be executed and start the learning by pressing **Start Training**.

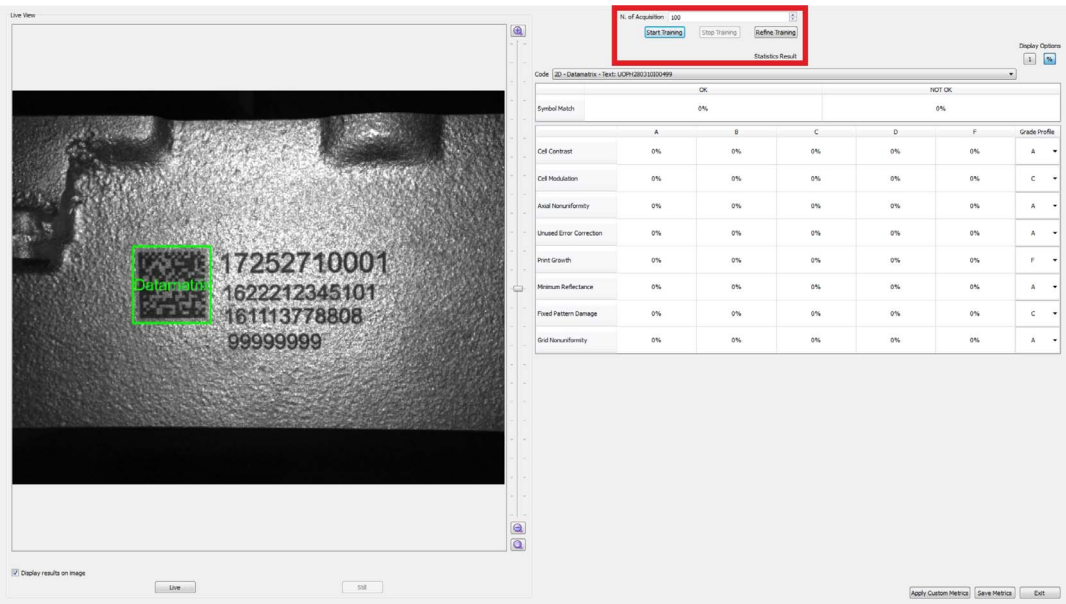

NOTE

Refer to "Help" on page 41 for more information about the quality grade.

At the end of the learning the percentages and degree of reading quality will be displayed.

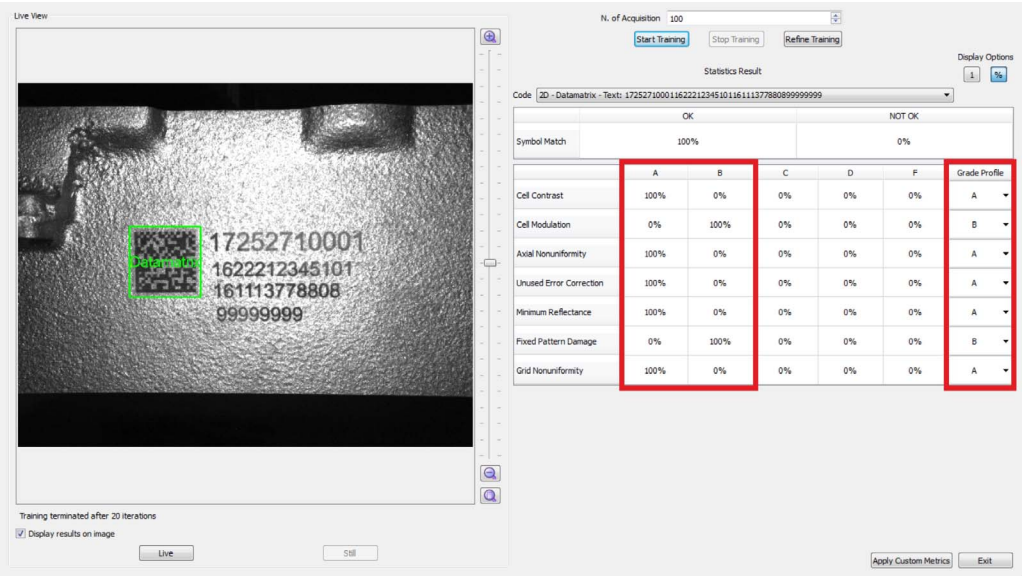

Select **Apply Custom Metric** to apply the individual metrics learned to the project.

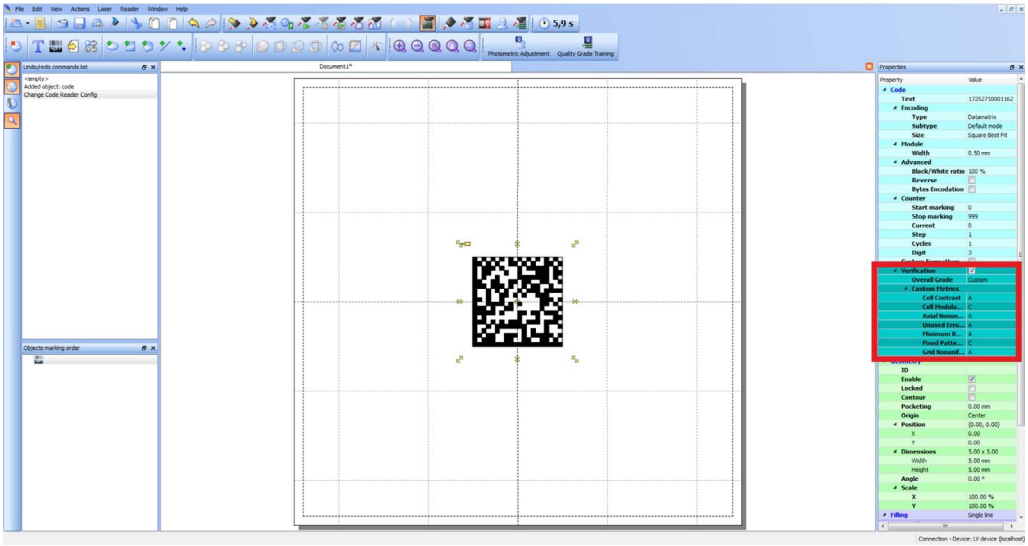

You can set a single degree of Overall desired for all metrics by selecting it in the item **Overall grade**.

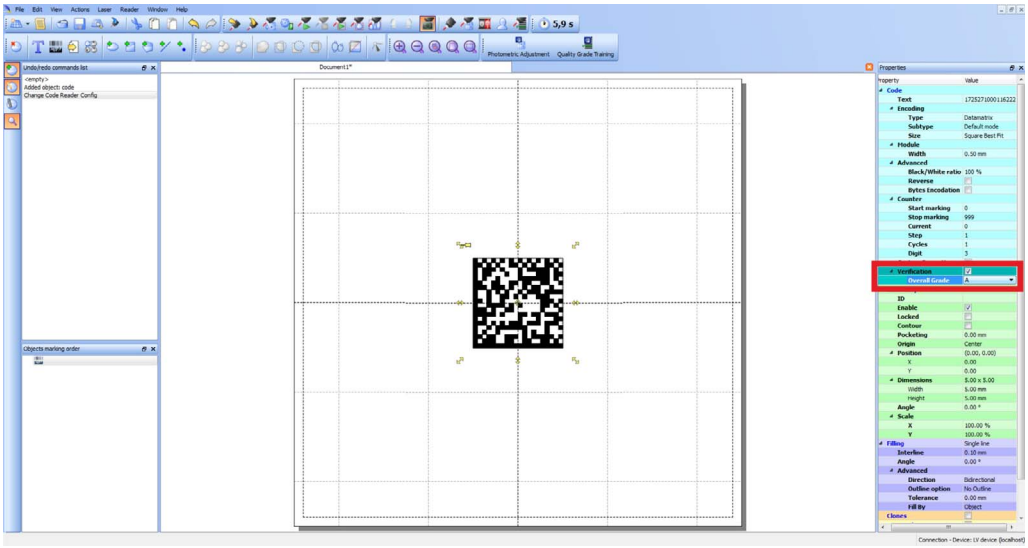

How To Test, Mark and Validate Your Document

You can simulate marking and validation by pressing the **Send Marking** button.

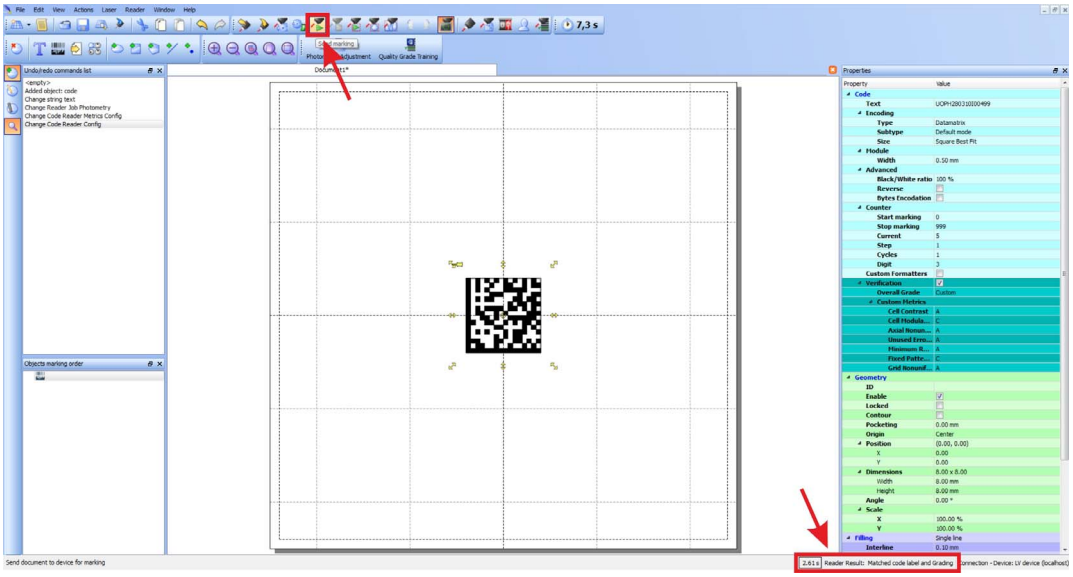

The result of the simulation is visible on the Lighter icon tray.

It is now possible to save the document by pressing the **Save to Device** button.

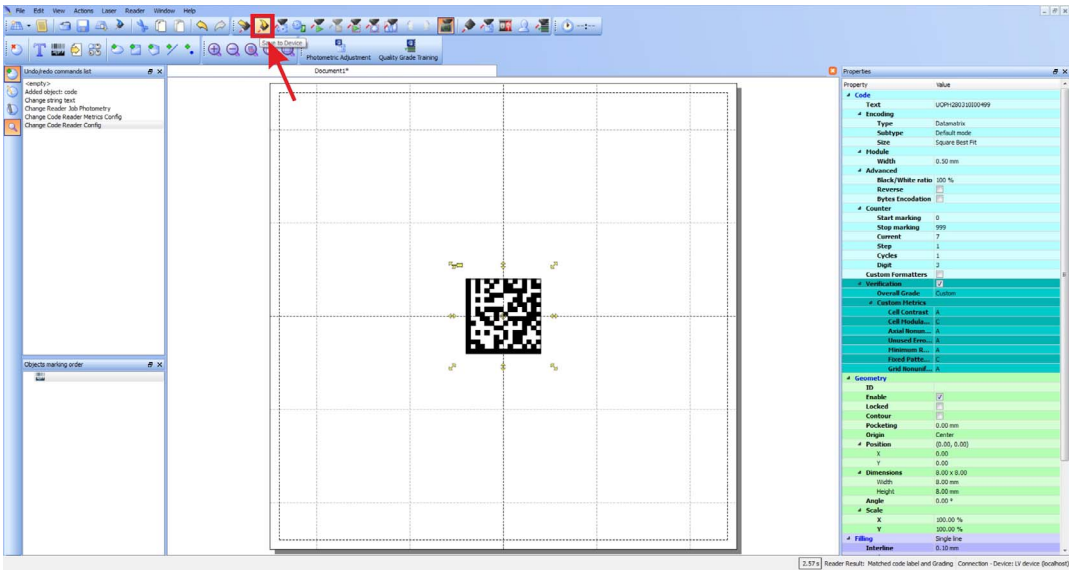

Open Laser Engine, select the document you just saved and perform the marking by pressing Start marking button.

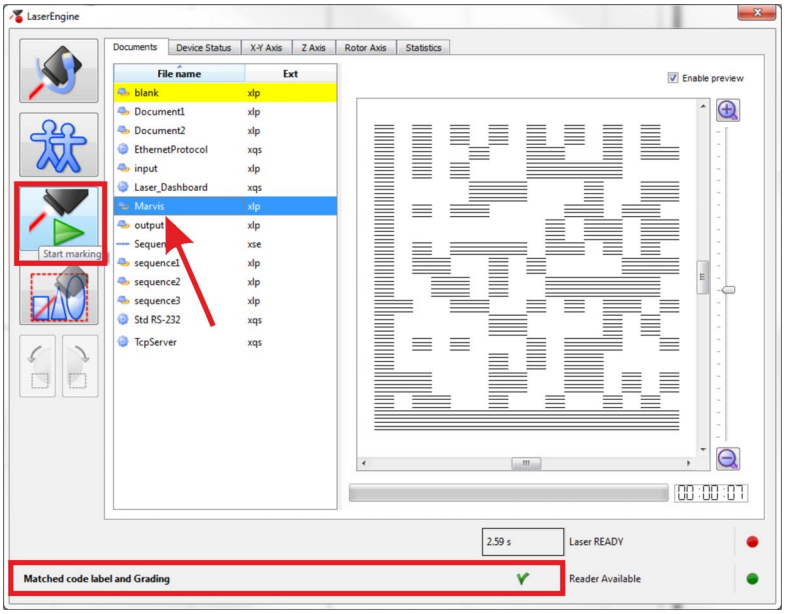

The result of the marking and validation is visible on the Laser Engine icon tray.

For automatic processing it is possible to execute a sequence. In Laser Engine switch to Auto Mode, select the sequence document and start marking by pressing **Start marking** button.

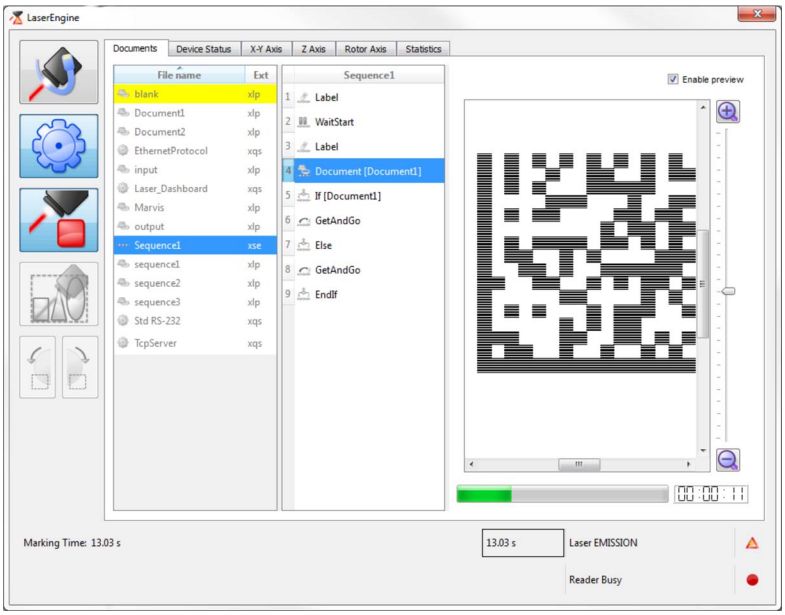

In the Laser Engine Documents tab, in addition to the preview of the document, it is also possible to display the steps of the sequence.

In the Laser Engine Icon Tray, at the end of each single sequence a message appears on the result of the marking and validation.

Marking and Validation Statistics

It is possible to consult the statistics on the marking and validation processes.

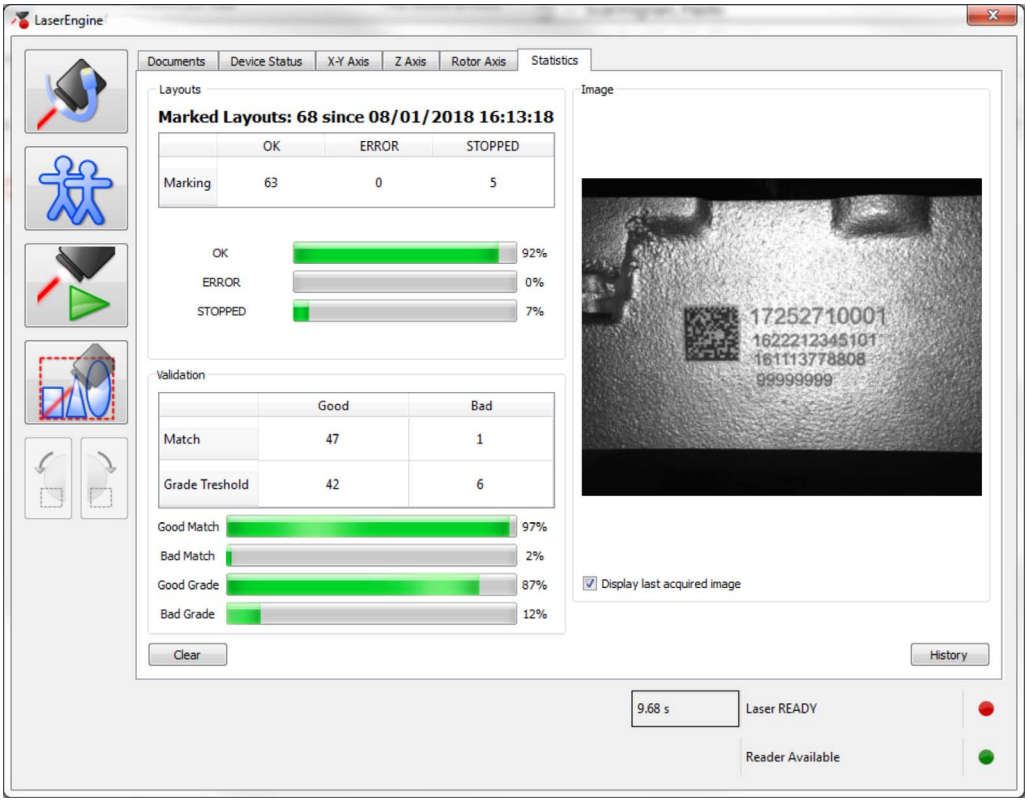

Statistics on marking processes are available in the **Layouts** section. The following statistics are displayed:

- OK: for the marking processes correctly performed
- ERROR: for the errors in marking processes
- STOPPED: for the marking processes stopped by an external command

Statistics on validation are available in the **Validation** section. The following statistics are displayed:

- MATCH: to match what is marked
- GRADE TRESHOLD: for good/bad match and good/bad grade

History: press this button to access the results history detail.

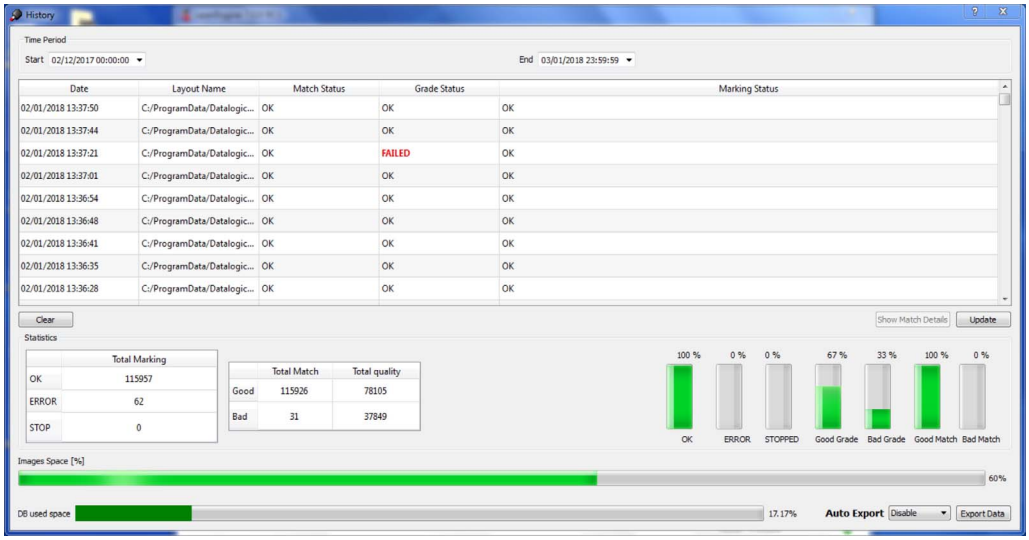

In the history window it is necessary to select the desired time period.

Start marking: set the starting time

End: set the end time

Clear: this button deletes all the information of the selected period (including database and images).

When the images space and DB used space are full, the oldest data are automatically overwritten. To delete the data manually, use the clear button.

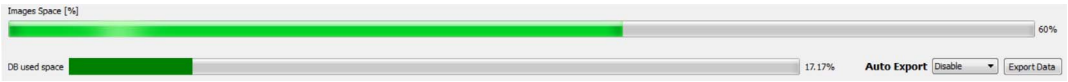

Show Match Details: this button shows the match detail (to enable this button **select the marking in the time period filed)**

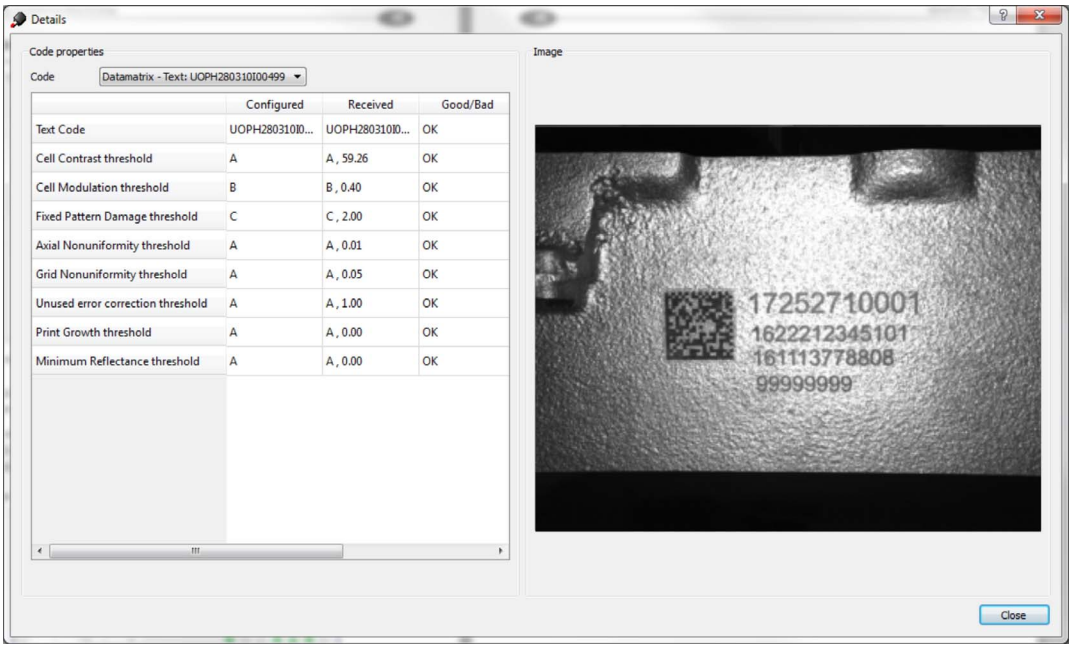

Update: press this button to update the time period field (for it works, the end of the time period must be set forward of the current time

Export Data: press this button to export the data to a `.cvs` file. It is also set an automatic export from the drop down menu.

Troubleshooting

To access the troubleshooting windows right-click on the Laser Engine icon in the Icon Tray and select the **Troubleshooting** item.

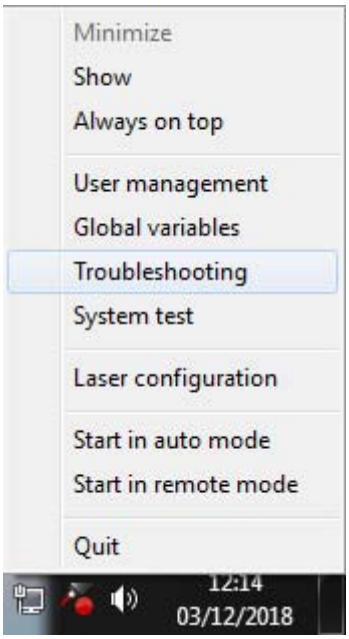

- In **Errors** Tab errors of the Current Session or the History are displayed.

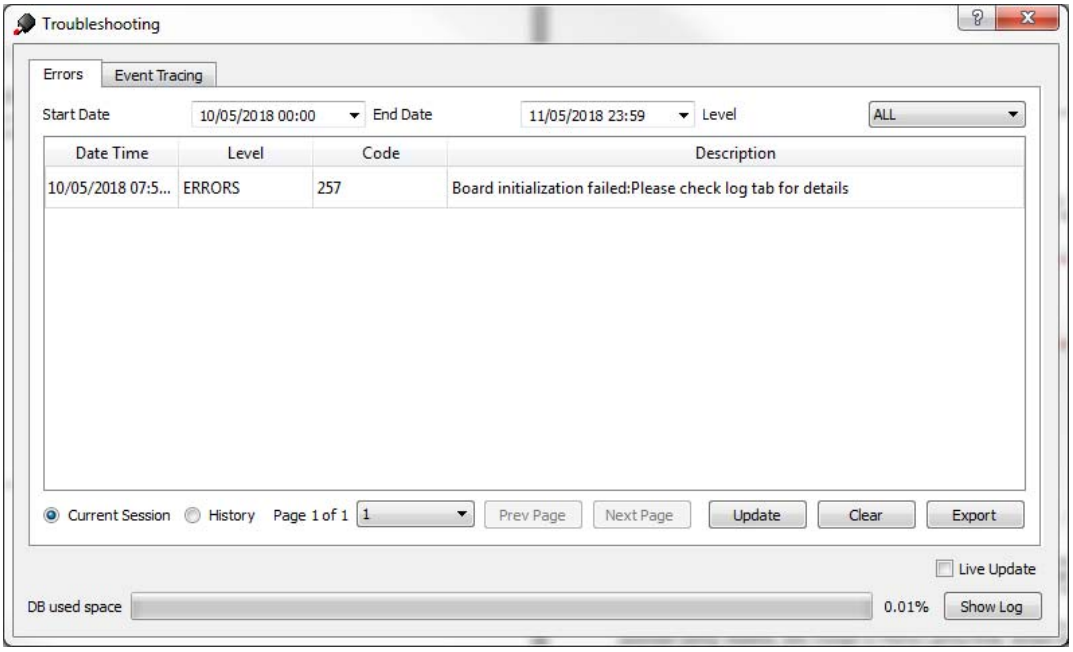

In the drop-down Level menu select the type of messages to display:

- **ALL**: display all messages
- **ERRORS**: display error messages
- **WARNINGS**: display warning messages
- **INFO**: display information messages

Click on the **Update** button to updates (select the Live Update box for an automatic and continuous update):
- the results of the Current Session
- the results of the History whenever the period has changed

Click on **Clear** button to delete data of the Current Session or select period.

Click **Export** button to export the data of the Current Session or select period to a `.cvs` file.

- In **Event Tracking** Tab errors of the Current Session or the History are displayed.

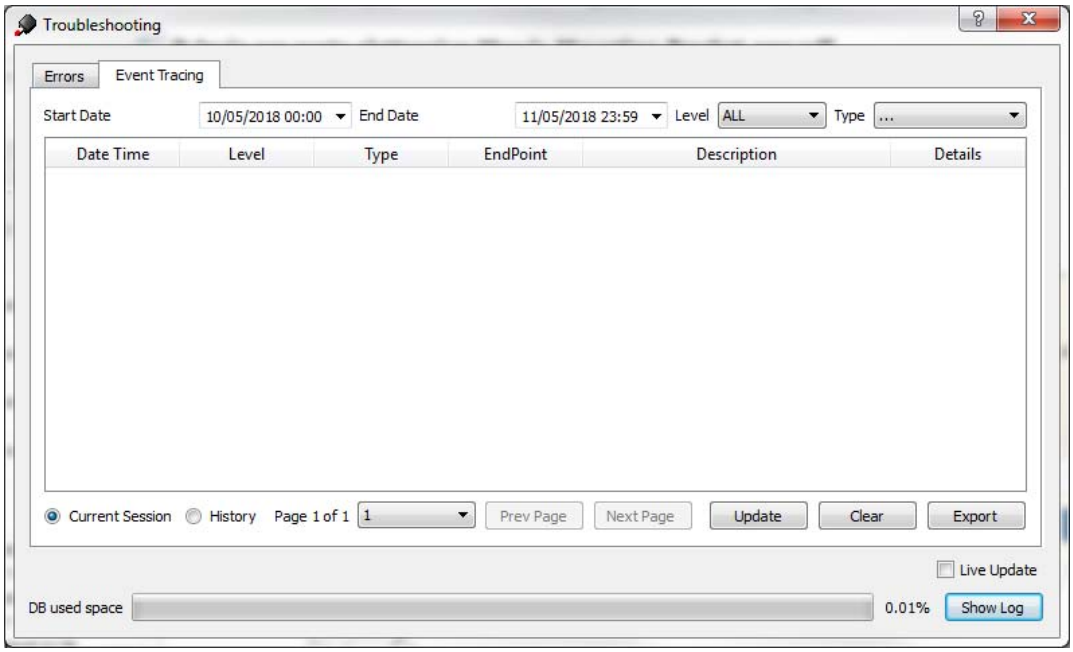

In the drop-down **Level** menu select the type of messages to display:
- **ALL**: display all messages
- **ERRORS**: display error messages
- **WARNINGS**: display warning messages
- **INFO**: display information messages

In the drop-down **Type** menu it is possible to filter one or more types of events (Lighter, Ethernet_IP; Axis, etc...).

NOTE

Only the events configured in the General panel of the Laser Configuration are displayed.

Click on the Update button to updates (select the Live Update box for an automatic and continuous update):
- the results of the Current Session
- the results of the History whenever the period has changed

Click on Clear button to delete data of the Current Session or select period.

Click Export button to export the data of the Current Session or select period to a `.cvs` file.

Appendix A
Help

PHOTOMETRIC ADJUSTMENT starting on page 42
QUALITY GRADE TRAINING starting on page 45

Photometric Adjustment

Setting

Photometric adjustment manages image acquisition photometry and focusing. For most applications, the **Auto-Setup** routine which automatically sets the photometry is the quickest and best solution. Otherwise these parameters can be set manually.

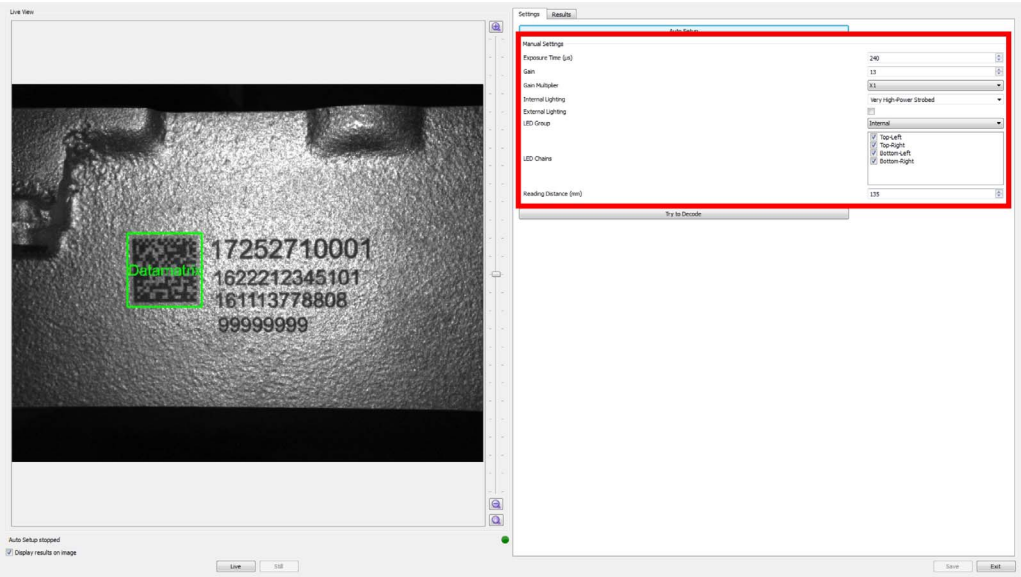

Exposure Time

It defines the time during which all pixels of the CMOS image sensor synchronously capture the frame. This parameter must be set according to the environmental conditions (external lighting, code contrast etc.). In general, a longer time corresponds to a lighter image but is susceptible to blurring due to the code movement. A shorter exposure time corresponds to a darker image.

NOTE: The range of values and step of this parameter change according to the Internal Lighting Mode parameter setting, therefore, after changes to Internal Lighting Mode, recheck Exposure Time.

Gain

Amplifies or reduces the pixel gray level effectively increasing or decreasing the contrast of the image.

Gain Multiplier

Multiplies the defined Gain from x2 to x10 times. If set to x1, the defined Gain is left unchanged.

Internal Lighting

Sets the operating mode of the internal lighting system. Possible values are:

- **Disabled**: the built-in LED array is turned off all the time. This option can be useful if using an external lighting system;
- **Always On**: the built-in LED array is turned on all the time at the lowest power level. This option is useful if the LED-array blinking (produced by -Power Strobed lighting modes and rapidly occurring reading phases) disturbs the operator.
- **Power Strobed**: the built-in LED array is on only during the image exposure time. Different Power Strobed lighting levels can be set.

NOTE: To avoid LED array overheating, for Power Strobed settings, the program automatically limits the range of allowed values for the Exposure Time parameter. It is strongly recommended to use high lighting values for short exposure times.

LED Group

This parameter enables one of the two possible internal lighting system LED groups: internal or external. The internal LED Group provides Bright Field illumination for dark absorbing backgrounds. The external LED Group provides low angle Dark Field illumination for DPM applications or highly reflective backgrounds.

Sectors

This parameter allows selecting which quadrants of the selected LED group will be enabled.

Reading Distance

For Liquid Lens models, this parameter sets the reading distance (measured in mm) defined as the distance from the reading window to the code surface.

Results

In Result Table Tab the values of the reading are displayed.

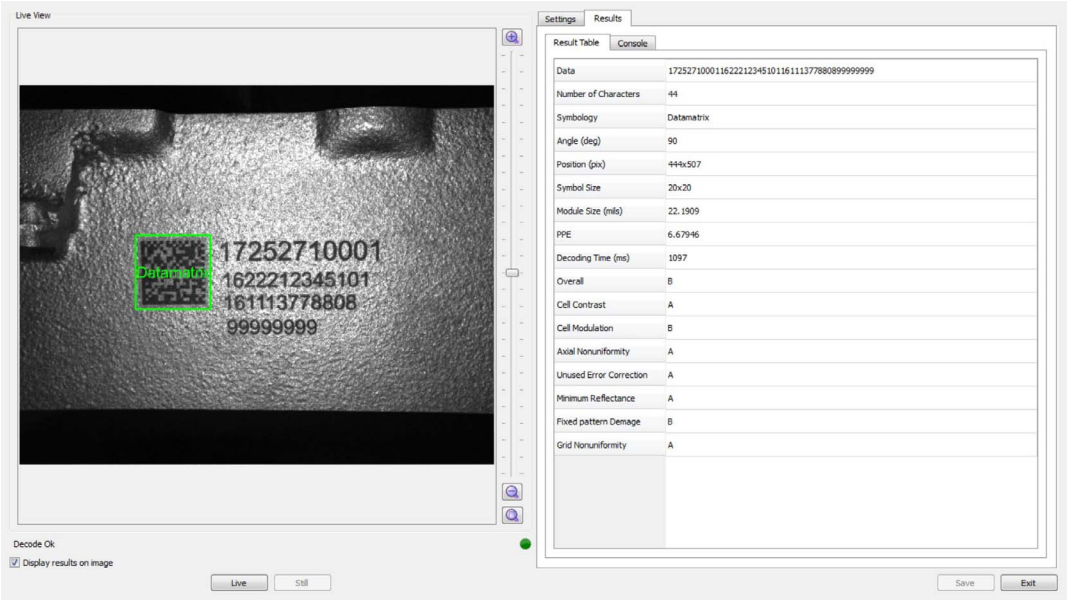

In the Console Tab the readings of the parameters defined by the user are displayed:

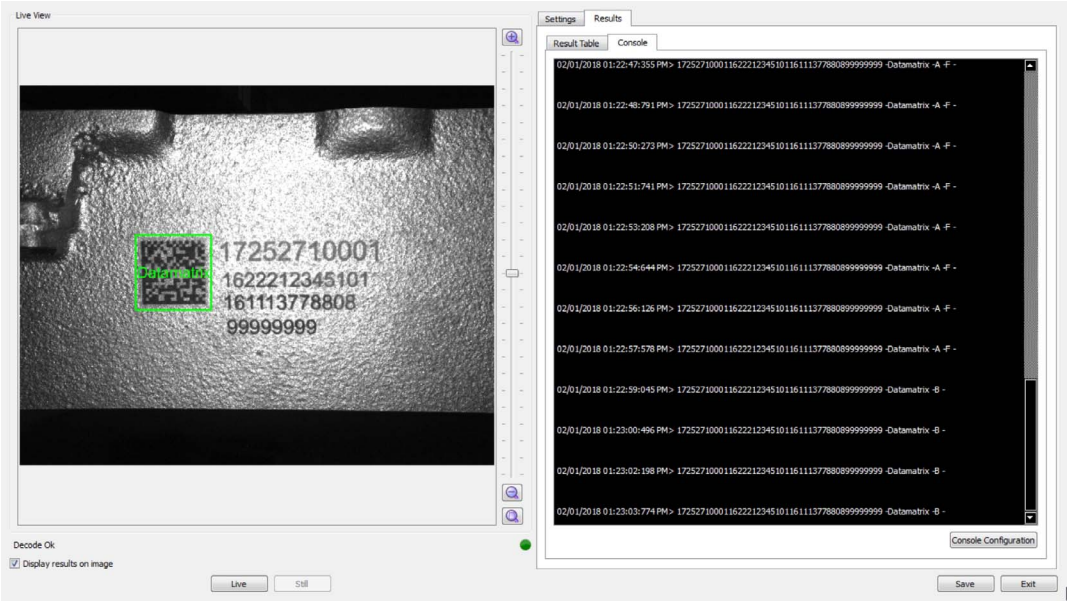

The parameters to be displayed can be selected by pressing the button Console Configuration:

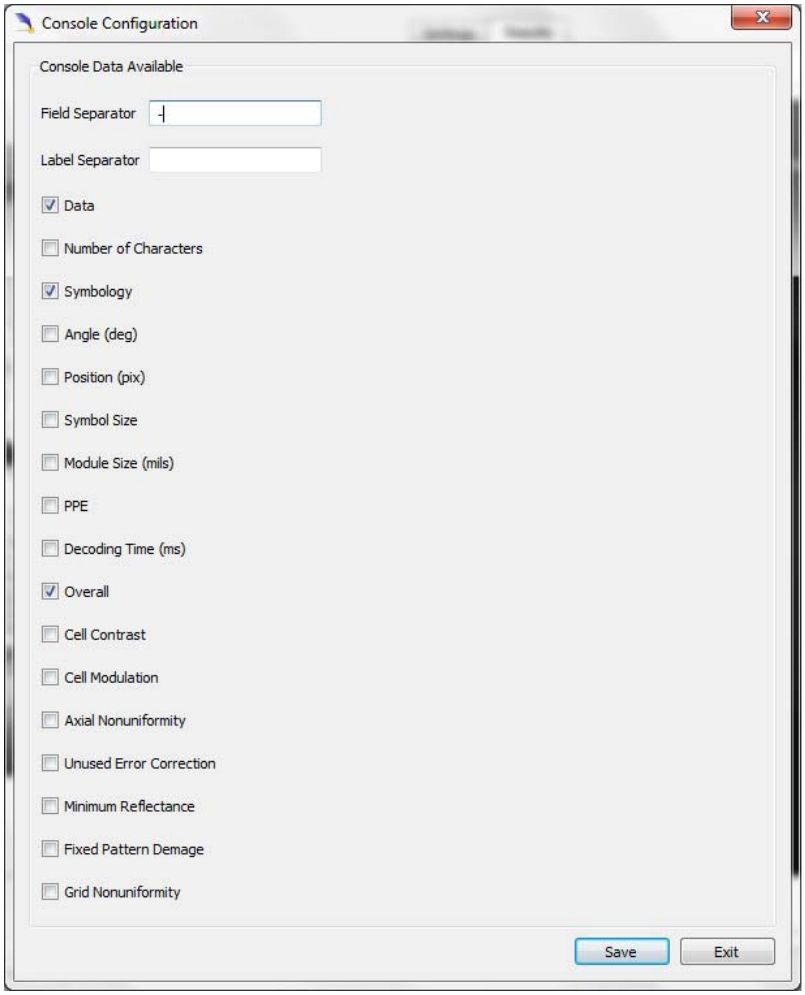

Quality Grade Training

Industrial traceability

In today's industrial application DPM (direct part marking) bi-dimensional codes like Datamatrix and QRcode have become crucial to correctly identify and automatically track parts and components within the production process (internal traceability) and along the entire supply chain (external traceability) till the end-of-life of the product. Laser marking is the preferred choice to enhance contrast and to increase resolution that means larger amounts of data stored in the code.

It is obvious that the most important feature of a code is its readability, or in other words, the capability to ensure fail-proof reading along the supply chain.

The Code Grading process

To ensure quantitative measurement of the code quality, specific Standards and Technical Reports have been defined: for DPM code the verification methodology is defined in the ISO/IEC TR 29158 (that includes the AIM DPM-1-2006 Quality Guideline).

The scope to the ISO/IEC TR 29158 Standard is to define methodologies for the measurement of specific attributes of two-dimensional code symbols, defining methods for evaluating and grading these measurements and finally classify the code into five quality classes or grades: A, B, C; D and F.

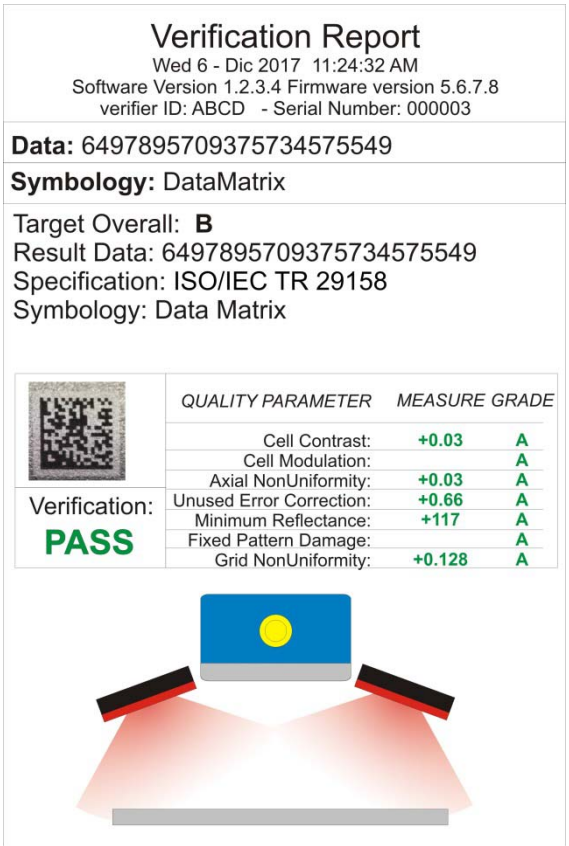

The higher the class the higher the reliability of the reading process, F grade symbols are unlikely to be read successfully in most environments.

The OVERALL quality of the code is defined by the lowest resulting grade within the evaluated set of individual parameters.

To perform a reliable analysis of a code, specific measuring instruments, called Certified Verifiers, are available on the market. These instruments embed standardized lighting systems, lenses and certified algorithms to objectively evaluate the quality of the code, providing a Quality Report with quantitative information about the code properties.

Verifiers are widely used use to evaluate and certify the quality of the so called “golden sample” or “approved quality sample” to be used as the reference in mass production to ensure fail proof readings.

Quality parameters of metrics

Accordingly with ISO /IEC TR 29158 that includes the AIM DPM-1-2006, seven quality parameters or Metrics have been defined. The knowledge of the meaning of each quality parameter may be helpful in laser marking process tuning. Each quality parameter is classified into grades from A to F, and OVERALL is defined as the lowest result among all the parameters or metrics.

CC - Cell Contrast

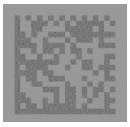

This parameter measures the differences between the mean brightest and the mean darkest values of the symbol.
'In laser DPM the creation of background of the code (quiet zone) with low power settings is extremely effective to boost the contrast.

CM - Cell Modulation

Cell modulation analyzes the uniformity of the contrast inside the code extension.
'In laser DPM this defect is usually refers to local non-uniformity of the material surface (i.e. finishing quality, dust, oil...) incorrect marking distance or tilted/ curved marking surfaces.

FPD - Fixed Pattern Damage

This metric checks the fundamental characteristics of the code (quiet zone around the code, “L” finder and clocking patterns, and reference dots).
Poor results on this metric may reduce the capability to locate and read the code.
As for “Cell Contrast”, the use of a smooth uniform background as a quite zone reduces the risk of low grade FPD.

UEC - Unused Error Correction

Data Matrix incorporates an error correction mechanism and data redundancy. This parameter tests and grades how much redundant data had to be used during reading to decode the data content. A perfect mark that requires no error correction would achieve a UEC score of 100% that results in grade A.

PG - Print Growth

Underprinting

Overprinting

Measures the deviation of actual elements dimension from the expected element dimension due to printing problems (i.e. overprint or underprint).

ANU - Axial Non-Uniformity

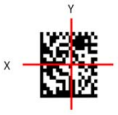

This parameter measures and grades the modules' squareness in the direction of each of the symbol's major axes (X-axis and Y-axis).
'In laser DPM applications this metric is typically affected by off-axis marking (tilted surfaces vs laser marking axis) but also off- axis reading (skewed reader vs target surface).

MR - Minimum Reflectance

Determines the degree to which the object reflects light.
Accurate tuning of laser parameters like power, speed and repetition rate dramatically influence this quality parameter.

GNU - Grid Non-Uniformity (GNU)

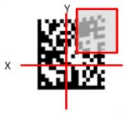

This parameter measure and grades the module placement by comparing to a nominal evenly spaced grid.

Assuming a grid on which the ideal angle of intersection is 90°, any angle deviation from 90° constitutes Grid Non-Uniformity.

Verification process

A DPM verification system or Verifier is composed of an imaging sensor, optical lens, dedicated lighting, stand and fixturing and verification software.

The verification process begins with the acquisition of the image of the code, in a standardized configuration (lighting Angle, Wavelength, and optical system Aperture).

After a digitalization process the image is evaluated by a Software Library that assesses the images on a number of quality metrics specified by the ISO/IEC Standards.

The output of a verification process is a digital report that includes the results of the quality metrics analysis and the overall grade of the code. Additional information or customized metrics are sometimes present in the report.

This off-line process, is aimed to test output of a marking equipment to ensure reliable code readability or to create the so called “Golden Sample” to be used as a quality reference.

From a process control standpoint, DPM verification systems can quickly detect problems at the marking station by monitoring variations in the quality of a just-applied code.

Verification in production environments

As other standard measurement instruments, Certified Verifiers are dedicated to operate in controlled environment, and typically are not suitable to monitor code quality in real world production environments.

Code acquisition in a real production environment is sensitive to ambient light variation, mechanical vibration, electrical noise, degradation of the LED light system, etc. These fluctuations are not compatible with absolute and standardized measurement of the grade and cause, for example, the grade of the same samples measured several times to actually give different values.

In automatic production processes it is important to constantly monitor in-line the quality of the marking in order to scrap non -readable or poorly readable components.

For the in-line quality check of the just-applied codes, industrial readers, like the Datalogic Matrix 300N™, are widely used, to perform comparative analysis of the code quality, monitoring at high speed variation in a real harsh production environment.

Even though the Matrix family uses a grading library fully compliant with ISO/IEC standards, it does not take into consideration the external environmental lighting parameters such as Aperture, Wavelength and Illumination Angle which can in any case affect the Scan Grade. For this reason the Matrix family can be used to monitor variations in code quality but cannot be considered as a Certified Verifier.

MARVIS™ is the traceability solution that ensures code quality in real production environments and combines into one single Graphical User Interface the flexibility of Laser Marking and the reliability of Matrix series industrial code images.

MARVIS™ allows collecting multiple measurements and computes the statistical dispersion of each individual quality parameter, measuring and considering the contribution of each individual parameter.

This statistical approach allows real sample quality threshold training and a simple and immediate visualization of the quality spread for each code parameter.

This fully automatic Quality Training process provides a so called “QUALITY PROFILE” (Patent Pending) that always includes all the relevant quality parameters.

In-line validation: a real example

To fully understand the advantages of this approach, consider the following example.

An OEM car manufacturer orders from a Tier1 supplier a mechanical component that includes a Datamatrix code.

To ensure reliable internal traceability, the OEM requires a QUALITY GRADE B or better.

The Tier1 manufacturer, produces a batch of samples accordingly with the customer's requirements, and, to evaluate the Quality Grade of the 2D code, he refers to a Certified Verifier that in the Metrologic laboratory provides a quality report as GRADE B, fully compliant with OEM request (Fig.1)

To ensure contract compliance, and reduce the cost of rejecting parts due to unreadable codes, Tier1 manufacturer decides to incorporate a direct part mark reader to monitor the DPM code quality.

Fig.1 Validation Report from certified Verifier.

Fig.2 Results of in-line quality inspection.

Once installed in a real production environment beside the laser marking unit, the direct part mark reader provides an overall GRADE C, even on the same “golden sample” just certified as GRADE B. (Fig.2)

How do they correlate these two pieces of information?

It is clear that the “golden sample” has an intrinsic quality of GRADE A, as validated by the Certified Verifier.

On the other side, the in-line code reader is really affected by measurement errors caused by installation factors like tilt, skew, not optimal reading and lighting etc.

These errors are always present in real world environments and are usually related to the effectiveness of the embedded grading algorithm.

MARVIS™ advantages: training on real sample

Starting from a qualified “golden sample”, MARVIS can provide a QUALITY PROFILE (Patent Pending) that maps quality distribution on each single metric even in the case of non-ideal installations and environment.

This Quality Profile defines a threshold metric by metric mitigating influence of external factors.

Setting a Quality Profile is as simple as pressing the “**START TRAINING**” button.

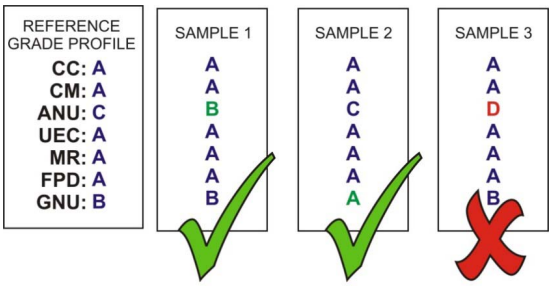

MARVIS™ advantages: single metric quality grade analysis

The use of OVERALL GRADE to validate the code quality may not detect some relevant code quality degradation.

By definition, code verification is based on matching the OVERALL GRADE of the sample parts with a reference grade. Since Overall Code Grade is determined only by the lowest grade among all the metric parameters, any fluctuation in individual metrics that lies above the lowest grade is neglected.

In other words, verification on OVERALL GRADE = C will ignore any variation on single metrics between A and C.

In the following example, three samples are verified with a target quality of GRADE C.

Since for all samples the lowest grade within the selected metrics is “C”, the OVERALL grade of the three samples match the requirements and all samples are verified and validated.

Instead, a single metric analysis, shows that the three samples are quite different.

Sample #3 has a much lower quality on 4 parameters (CM, UEC, MR, GNU) compared to other samples and to the reference.

These differences are “masked” by the poor results on Axial Non Uniformity of the reference that contribute to the OVERALL GRADE.

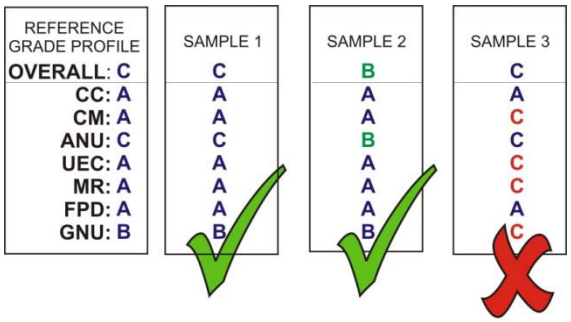

Thanks to the QUALITY METRIC GRADE PROFILE, MARVIS™ is able to evaluate the fluctuation in quality on single metrics, independently from the OVERALL, ensuring high read rate along the entire supply chain.

MARVIS™ advantages: statistic threshold

GRADE PROFILE offers also a clear indication of the statistical threshold of a quality grade for each metric.

In the following table it is evident that FPD for a specific sample will be GRADE B at 65% and GRADE C at 35%.

This statistical approach provides an immediate view of the distribution of the quality.

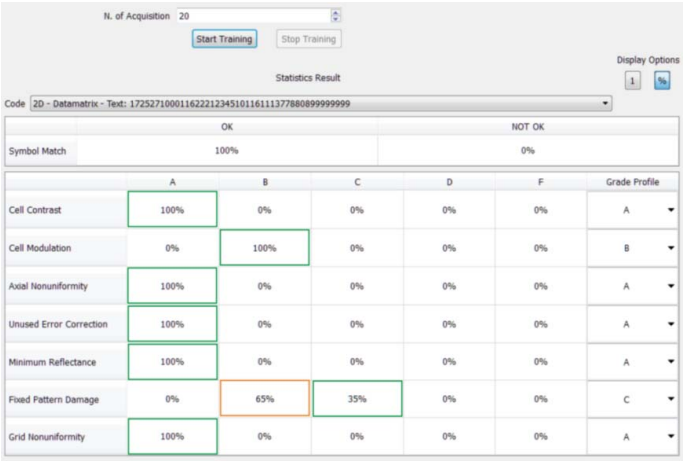

By running CODE QUALITY TRAINING on different lighting conditions, it is possible to evaluate the influence of the external environment on the grading analysis, and eventually compensate for fluctuations.

Marvis™ suggest GRADE C (in green) for FDP to avoid an excessive scrap rate. Selecting the GRADE B threshold for this metric would statistically result in a 35% scrap rate.

Appendix B
About LED Ring Light ID

GENERAL SPECIFICATION starting on page 52
IEC62471-1 COMPLIANCE starting on page 52

General Specification

Electrical Specifications	Color	24V Current (A)	Electrical specifications
	WHI	0.14	0.47
Operating Temperature	0° to 60° C		
Cable Informations	3 meters (118") long		
Compliance	CE, RoHS		
IP Rating	IP50		
Lumen Maintenance	L70 = 50,000 hours		

Optical Performances	Working Distance (mm)	Illuminance (klux)	Irradiance (W/m2)	FWHM Diameter (mm)
	100	46.0	136.0	114.3
	300	10.8	31.4	190.5
	600	3.8	8.6	355.6

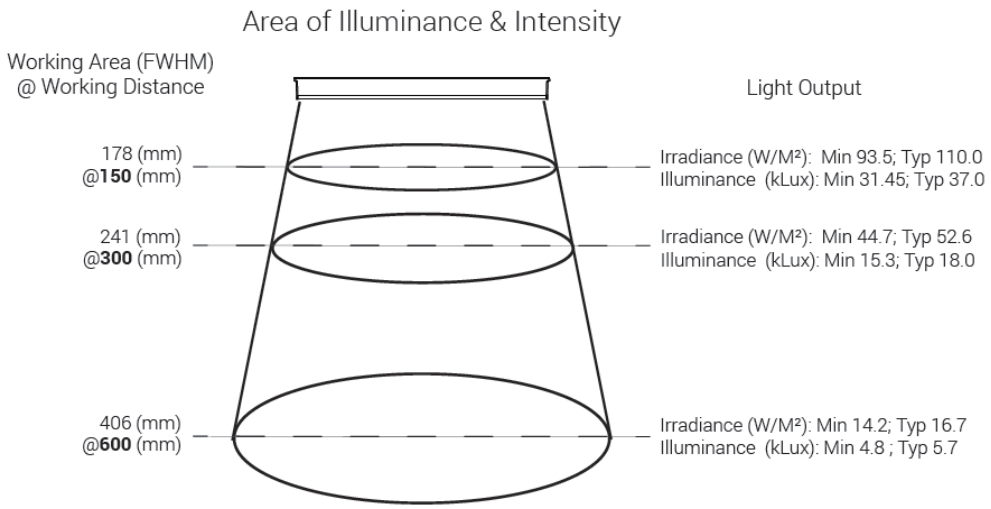

IEC62471-1 Compliance

This product has been classified RISK GROUP 1 (LOW-RISK) according IEC62471-1.

The philosophical basis for this classification is that the lamp does not pose hazard due to normal behavioral limitations on exposure. This requirement is met by lamp that exceeds the limits for the Exempt Group but that does not pose.

- a retinal blue-light hazard (Lb) within 100s, nor
- a retinal thermal hazard (Lr) within 10s

Only Lb and Lr are considered because the product uses white LEDs (emissions only in the 400-780nm range).

In carrying out the obligations laid down in Articles 6(3) and 9(1) of Directive 89/391/EEC, the employer, in the case of workers exposed to artificial sources of optical radiation, shall assess and, if necessary, measure and/or calculate the levels of exposure to optical radiation to which workers are likely to be exposed so that the measures needed to restrict exposure to the applicable limits can be identified and put into effect. (article 4, section II, Directive 2006/25/EC of the European Parliament and of the Council of 5 April 2006 on the minimum health and safety requirements regarding the exposure of workers to risks arising from physical agents (artificial optical radiation).

© 2018 Datalogic S.p.A. and /or its affiliates ▪ All rights reserved. ▪ Without limiting the rights under copyright, no part of this documentation may be reproduced, stored in or introduced into a retrieval system, or transmitted in any form or by any means, or for any purpose, without the express written permission of Datalogic S.p.A. and/or its affiliates ▪ Datalogic and the Datalogic logo are registered trademarks of Datalogic S.p.A. in many countries, including the U.S. and the E.U.

www.datalogic.com

Datalogic S.r.l.
Via S. Vitalino, 13 | 40012 Calderara di Reno | Bologna - Italy
Tel. +39 051 3147011 | Fax +39 051 3147205